Too early RAI problem

3GPP R14 Access Stratum Release Assistance Indication (AS RAI)

Jakub Bluszcz jakub.bluszcz@nokia.com – Domain Solution Architect (DSA)

09 Feb 2022

© 2022 Nokia
Document ID: DSA/BJ/EX4573v001

Introduction

Problem & proposed solution

© 2022 Nokia

Problem & proposed solution:

Problem:

- Some Cat-M and Cat-NB UEs signal RAI whenever their UL buffer is empty.
- If the UE triggers RAI too early, the radio connection is released before the application layer transaction is successfully completed. Therefore, the application layer traffic is continued over the new radio connection established soon after the release of the previous radio connection. In extreme cases, a misbehaving UE can generate huge number of short-term Mobile Originated (MO) and/or Mobile Terminated (MT) radio connections creating unnecessary network load.
- The measured call intensity generated by 1 misbehaving UE can be as high as 700 calls / 30 min

Proposed solution:

TS.40 CR 100x - more precise AS RAI tests to prove that:

- UE is able to refrain from signaling RAI if there is no valid reason to assume that data exchange has been completed,
- UE is able to signal RAI if there is a valid reason to assume that data exchange has been completed,
- UE RAI information is trustworthy.

© 2022 Nokia

Problem in statistics (CAT-M field example)

- RAI triggered releases only
- mostly MT connections: >99%
- **Call duration: ~300 ms**
- DRB holding time: <200 ms (min 60ms)
- **Call intensity: 700 calls/30 min** (per 1 UE)
- Call-to-call gap median: 2260 ms (includes paging delay)
- Call-to-call gap min: 190 ms
- **Paging congestion** (entire paging area level)

© 2022 Nokia

Consequences if no action

AS RAI feature is too risky to be enabled by MNOs.

© 2022 Nokia

RAI feature

Idea, RAI features and example call flows

© 2022 Nokia

RAI – general idea

With RAI enabled, the UE may indicate that no further data is expected, and the connection may be released by the network.

RAI is a “successor” of 3G Fast Dormancy.

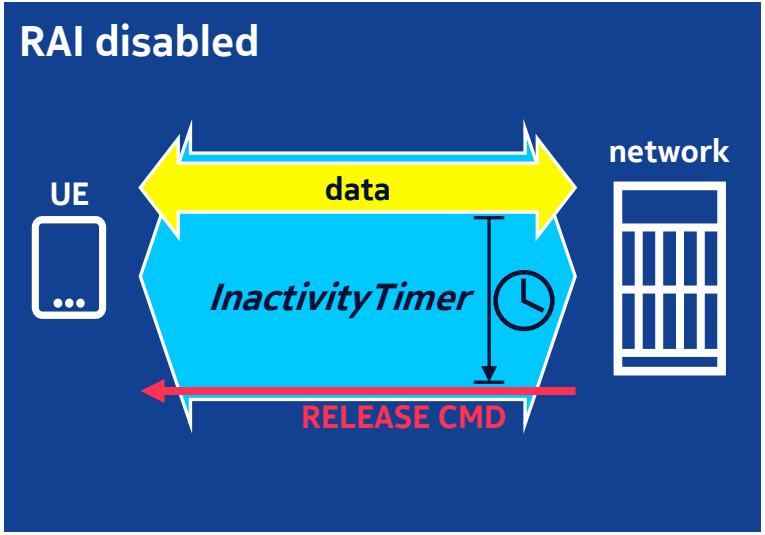

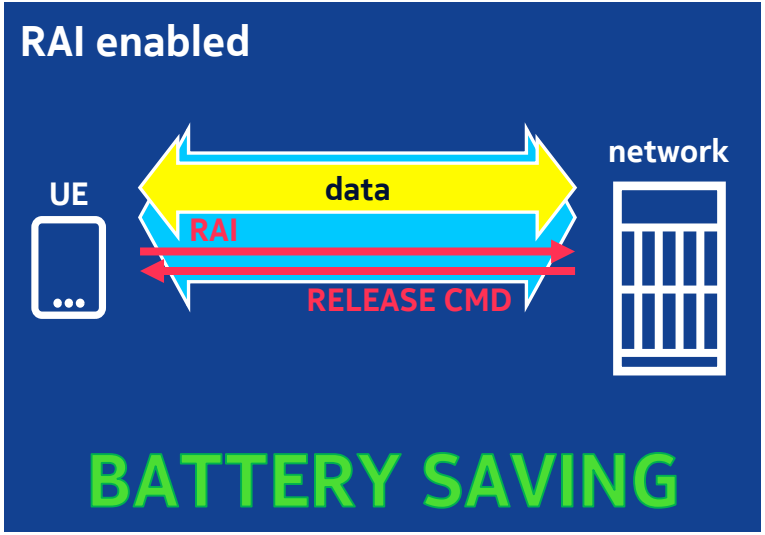

© 2022 Nokia

4G/5G standard IoT RAI features

RAI type	System	3GPP Release	3GPP TS numer(s)	Comments
NAS RAI	4G	R13	24.301 (NAS)	part of C-plane CIoT EPS optimisation
	5G	R15	24.501 (NAS)	part of C-plane CIoT 5GS optimisation
AS RAI	**4G (E-UTRAN)**	**R14**	**36.321 (MAC)**	**modified BSR reporting**
enhanced AS RAI	4G (E-UTRAN)	R16	38.321 (MAC)	new DCQR & AS RAI MAC CE
RRC state preference	5G (NR)	R16	38.331 (RRC)	part of RRC Assistance Information

© 2022 Nokia

AS RAI disabled

(inactivity timer expiry triggered release)

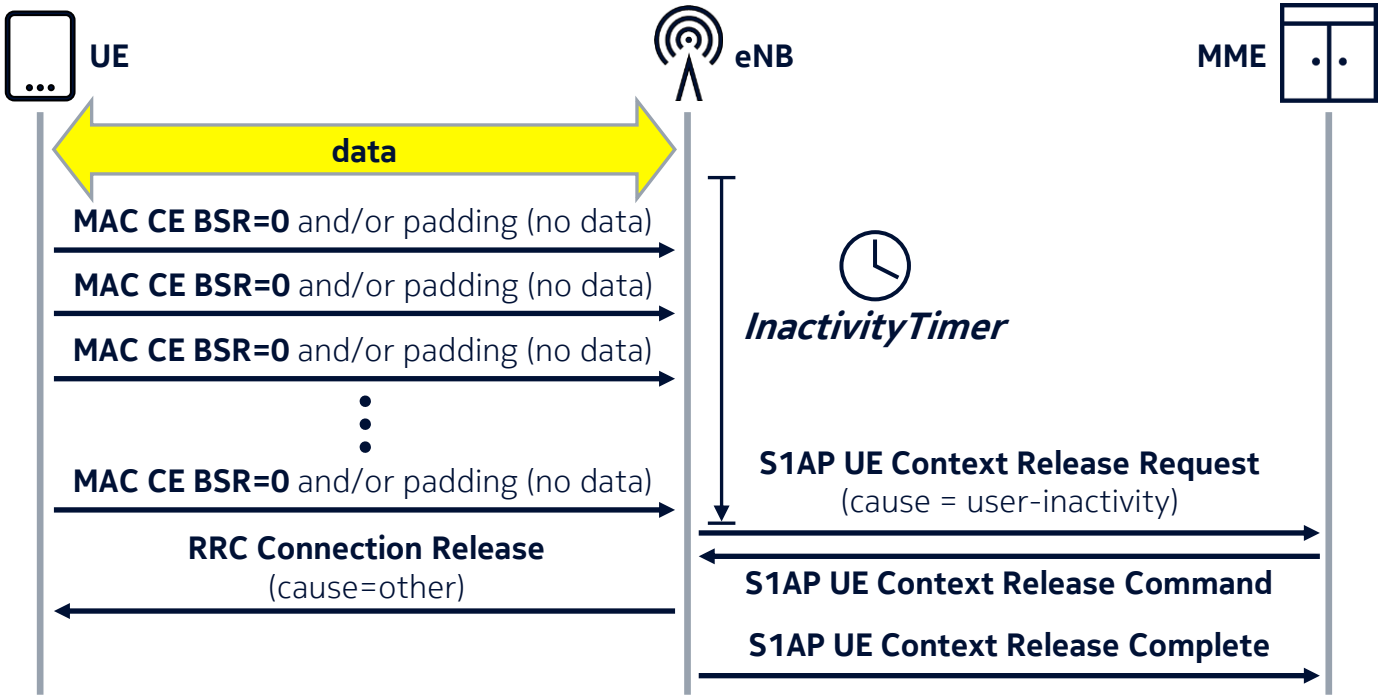

© 2022 Nokia

AS RAI enabled - case #1

(UE is **not expecting more data** to send or receive in the near future)

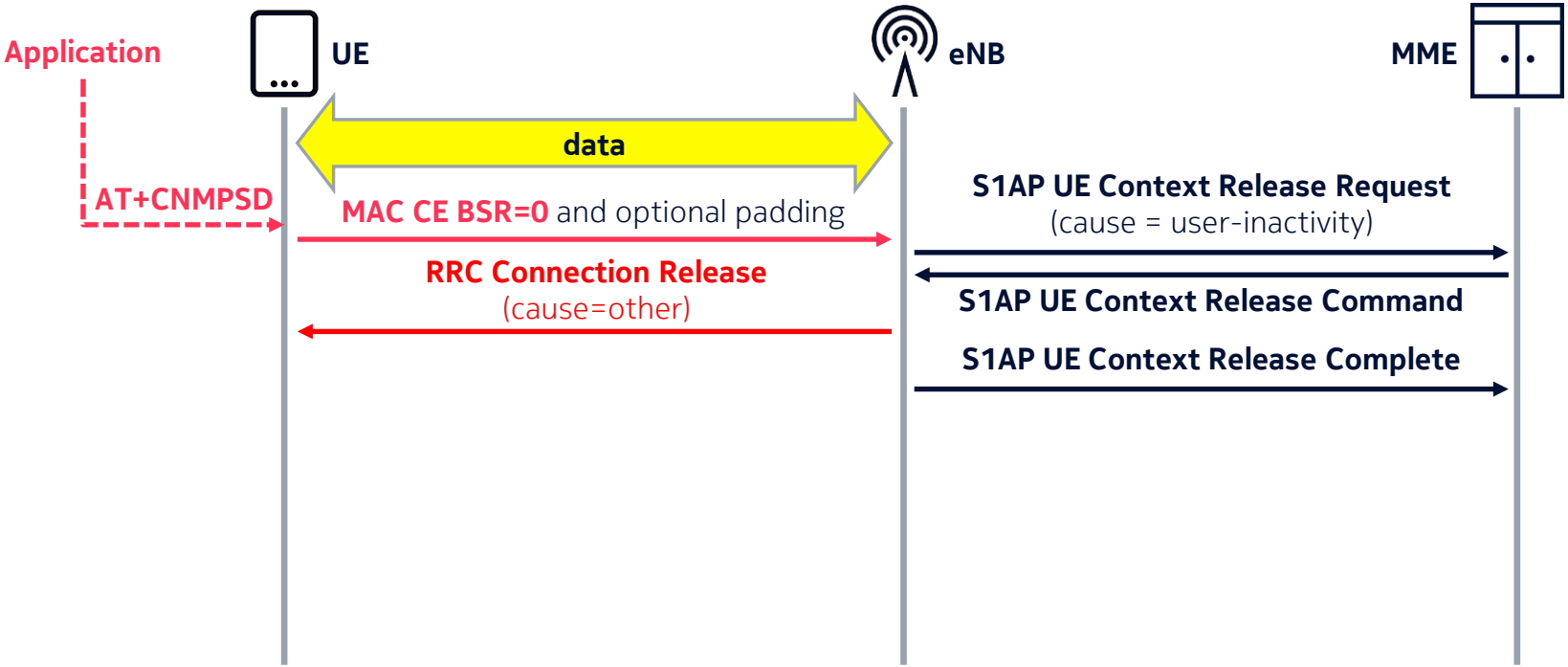

© 2022 Nokia

AS RAI enabled - case #2

(UE **may have more data** to send or receive in the near future)

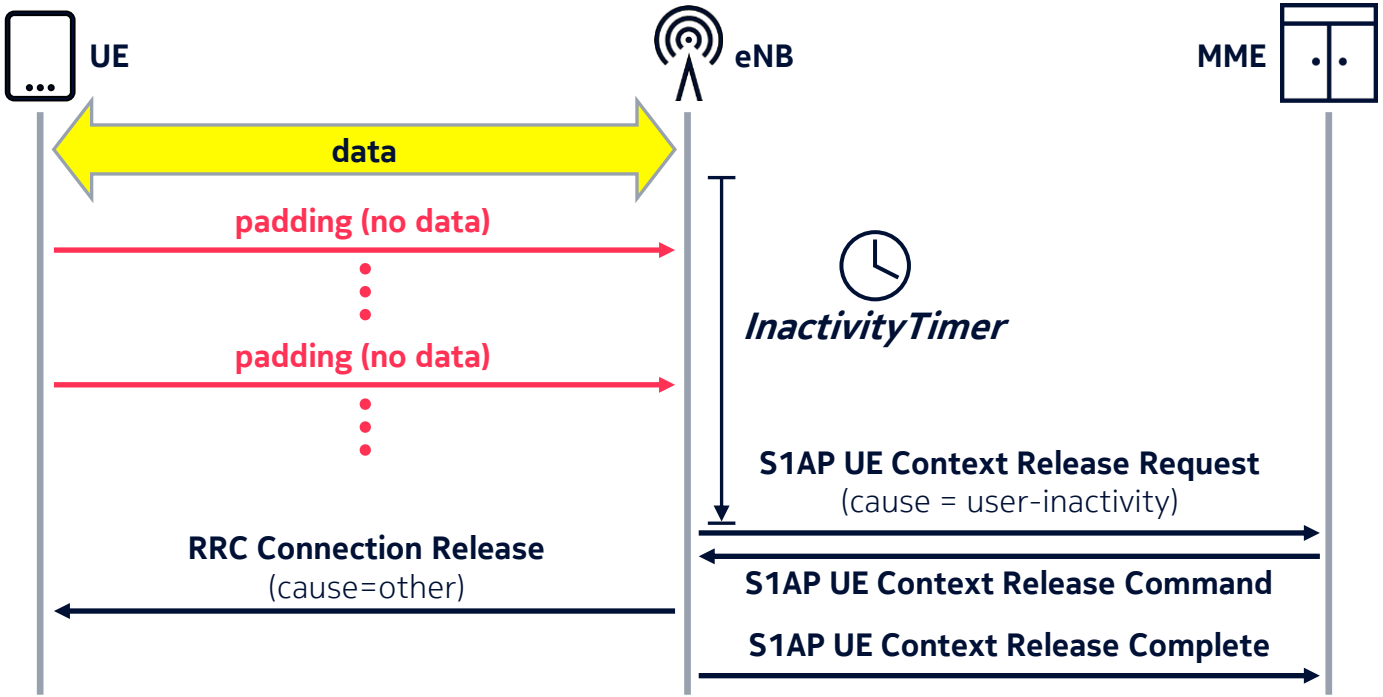

© 2022 Nokia

AS RAI Standardization

3GPP & GSMA

© 2022 Nokia
NOKIA

AS RAI in 3GPP 36.321 clause 5.4.5

[…]For NB-IoT or BL UEs:

- if *rai-Activation* is configured, and a buffer size of zero bytes has been triggered for the BSR, and the UE may have more data to send or receive in the near future:
  - cancel any pending BSR.

© 2022 Nokia

AS RAI in 3GPP 27.007 clause 10.1.33

[…] No more PS data +CNMPSD

Command	Possible Response(s)
+CNMPSD	
+CNMPSD=?	

Table 10.1.33-1: +CNMPSD action command syntax

Description

This command indicates that no application is expected to exchange data.

[…] For BL UEs or NB-IoT UEs, if further conditions defined in 3GPP TS 36.321 [158] and 3GPP TS 36.331 [86] are met, this can cause triggering of the Release Assistance Indication.

© 2022 Nokia

GSMA TS.40 clause 2.3.4

Step	Test procedure	Expected behaviour
1	Initiate Data transfer on DUT	DUT receives RRCConnectionSetup with “rai-Activation ” set to true DUT is in RRC_CONNECTED
2	Verify that DUT enters RRC_IDLE state right after the completion of data transfer	DUT triggers a Buffer Status Report (BSR) with buffer size of zero bytes DUT receives RRCConnectionRelease and enters into RRC_IDLE

© 2022 Nokia

Proposed solution

Change in TS.40 clause 2.3.4

© 2022 Nokia
NOKIA

Test 1: AS RAI – BSR=0 cancellation

Step	Test procedure	Expected behaviour
1	Initiate data transfer on DUT according to the pattern: at least 4 transactions of short UL packet quickly followed by short DL packet with 1 s gap between UL packets (“ping-like sequence”).	DUT receives RRCConnectionSetup or RRCConnectionReconfiguration with “rai-Activation” set to true DUT is in RRC_CONNECTED
2	Verify that DUT remains in RRC_CONNECTED until the successful transmission of the last DL packet.	DUT does not send any BSR=0 before the last DL packet is successfully received.

A simple *ping* test to detect UE implementations that are reporting BSR=0 whenever UL buffer is empty and are not able to cancel BSR=0, i.e., officially they support AS RAI R14, but in fact they behave like UEs R13 (observed behavior).

BSR=0 is not required at the end of the *ping* sequence (because it is better for the UE, application and the network to keep the radio connection longer than to release it too early).

© 2022 Nokia

Test 2: AS RAI – BSR=0 transmission

Step	Test procedure	Expected behaviour
1	Initiate data exchange on DUT with a pattern typical for a given UE type (see Note 1).	DUT receives RRCConnectionSetup or RRCConnectionReconfiguration with “rai-Activation” set to true DUT is in RRC_CONNECTED
2	Verify that at any phase of data exchange or after it is finished DUT transmits BSR=0 and immediately enters RRC_IDLE (see Note 2).	DUT transmits BSR=0 when it does not expect data exchange in the near future. DUT receives RRCConnectionRelease and enters RRC_IDLE

A simple test to detect UE implementations that are not able to transmit BSR=0 (opposite scenario to Test 1).

RAI triggering method is not important.

© 2022 Nokia

Test 3: AS RAI – assistance reliability

Step	Test procedure	Expected behaviour
1	Initiate a longer discontinuous data exchange on DUT that results in at least: 10 RRC_IDLE to RRC_CONNECTED transitions, 10 RRC_CONNECTED to RRC_IDLE transitions and 10 transmissions of BSR=0.	During each RRC connection establishment DUT receives RRCConnectionSetup or RRCConnectionReconfiguration with “rai-Activation” set to true.
2	Verify that after each BSR=0 triggered RRC connection release the UE remains in RRC_IDLE for at least 3 seconds (see Note 1).	DUT transmits BSR=0 when it does not expect data exchange in the near future. The new MO/MT connection is not established for the purpose of data exchange soon after the RAI based release of the previous connection.

A simple test to detect UE implementations that report BSR=0 too early (observed behavior).

The value of 3s is lower than typical RRC (IN)ACTIVITY timer used by MNOs (the most aggressive setting of RRC (IN)ACTIVITY timer known from our practice is 4s). This value can be considered a ‘safe’ value for MNO because with disabled RAI after expiry of RRC (IN)ACTIVITY timer the connection is released, and a new connection can be established at any time.

© 2022 Nokia

NOKIA