May 26th, 2020

TIM GROUP

Additional 3GPP enablers for seamless application migration

Mario Madella

SA WG2: TS 23.501 (V16.4.0)

Enhancement of UP path management based on the coordination with AFs

In order to avoid or minimize service interruption during PSA relocation for a PDU session of SSC mode 3, or a PDU session with UL CL or branch point, according to the indication of "AF acknowledgment to be expected" on AF subscription to corresponding SMF events (DNAI change) in the PCC rules received from the PCF and local configuration (e.g. DN-related policies) the SMF may wait for a response from the AF after sending a notification (an early notification or a late notification) to the AF. In the case of late notification, based on the indication of "AF acknowledgment to be expected" on AF subscription, the SMF may send the notification before activating the UP path towards a new DNAI (possibly through a new PSA). The notification sent from the SMF to the AF indicates UP path management events (DNAI change). The AF can confirm the DNAI change indicated in the notification with the SMF by sending a positive response to the notification to the SMF or reject the DNAI change by sending a negative response.

NOTE: The AF can determine whether application relocation is needed according to the notification of DNAI change. If not, the AF can send a positive response to the SMF immediately; otherwise, the AF sends the positive response after application relocation is completed or a negative response if the AF determines that the application relocation cannot be completed on time (e.g. due to temporary congestion). The AF decision and behaviors on application relocation are not defined.

CONFIDENTIAL - MARKET SENSITIVE

SA WG2: TS 23.501 (V16.4.0)

Enhancement of UP path management based on the coordination with AFs

The AF can include N6 traffic routing information related to the target DNAI in a positive response sent to the SMF. The SMF configures the N6 traffic routing information from the AF response to the PSA on the UP path.

In the case of early notification, based on the indication of "AF acknowledgment to be expected" on AF subscription, the SMF does not configure the UP path towards the new DNAI until it receives a positive AF response as specified in clause 4.3.6.3 of TS 23.502.

In the case of late notification, based on the indication of "AF acknowledgment to be expected" on AF subscription, the SMF does not activate the UP path towards the new DNAI until it receives a positive AF response as specified in clause 4.3.5 of TS 23.502.

CONFIDENTIAL - MARKET SENSITIVE

SA WG6: TR 23.758 (V17.0.0) “Study on app architecture for enabling Edge App”

Key Issue #9: Preserving Service Continuity

When a UE handoffs to a new location, different Edge Application Servers may be more suitable for serving the Application Clients in the UE. There needs to be a way for Application Clients in the UE to continue their service while replacing the serving Edge Application Server, with target Edge Application Server. Furthermore, similar service continuity requirements exist for the cases in which the Edge Application Servers are transferred from the Edge Data Network to Servers in the cloud and vice versa. Such transitions may occur as a result of a mobility event, or even as a result of other non-mobility events such as load balancing. This key issues proposes to study "upper layer enablers" for service continuity that are within the scope of the application architecture for Edge Application Servers (e.g. mechanisms for traffic redirection).

Conclusions for Key issue #9:

- Solution #9 (Relocation of application context – **Edge Application Server** triggered)
- Solution #16 (**Edge Enabler Server** initiated application context relocation)
- Solution #20 (**Application Client** initiated relocation of application context)
- Solution #21 (**Edge Enabler Client** triggered application context relocation)

3GPP Rel-17 TS 23.558 “Architecture for enabling Edge Applications” is under development.

CONFIDENTIAL - MARKET SENSITIVE

Seamless mobility with N9 forwarding tunnel

From 3GPP TR 23.725 (V16.2.0) “Study on enhancement of URLLC support in the 5G Core network” and from clause 4.3.5.6 of TS 23.502 (V16.4.0).

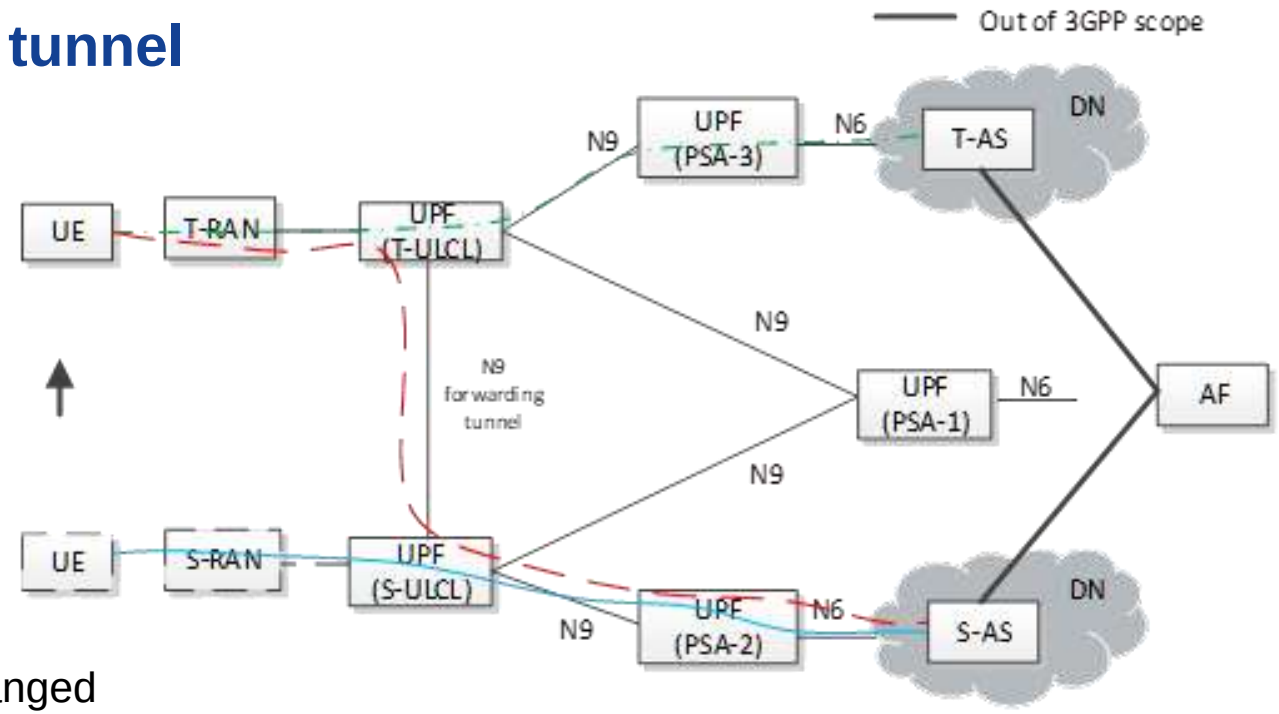

Blue path-starting state: The UE has not changed its position. Traffic from UE to the S-AS on the following path: S-RAN – S-ULCL – S-AS.

Red path-intermediate state: The UE's location has changed from S-RAN to T-RAN, but since the upper-layer data has not been prepared on the T-AS the UE still accesses the S-AS through the N9 tunnel. Uplink traffic from existing sessions (between UE and Source AS) on the following path: T-RAN - T-ULCL - S-ULCL - PSA2. Similarly, S-ULCL is configured to forward all downlink traffic for this UE coming from S-AS into the N9 forwarding tunnel towards T-ULCL.

Green path-final state: The application service completes the redirection, and the traffic can be transmitted from UE to the T-AS through T-ULCL and PSA3.

CONFIDENTIAL - MARKET SENSITIVE

Thank You

TIM