

VoLTE Roaming Testing
Version 1.0
28 January 2014

This is a Non-binding Permanent Reference Document of the GSMA

Security Classification: Non-confidential

Access to and distribution of this document is restricted to the persons permitted by the security classification. This document is confidential to the Association and is subject to copyright protection. This document is to be used only for the purposes for which it has been supplied and information contained in it must not be disclosed or in any other way made available, in whole or in part, to persons other than those permitted under the security classification without the prior written approval of the Association.

Copyright Notice

Copyright © **2015** GSM Association

Disclaimer

The GSM Association ("Association") makes no representation, warranty or undertaking (express or implied) with respect to and does not accept any responsibility for, and hereby disclaims liability for the accuracy or completeness or timeliness of the information contained in this document. The information contained in this document may be subject to change without prior notice.

Antitrust Notice

The information contain herein is in full compliance with the GSM Association's antitrust compliance policy.

Table of Contents

1
1 Introduction 3
1.1 Scope of document 3
1.2 Objective of tests 3
1.3 Definition of Terms 4
1.4 Document Cross-References 5
2 Test Cases 5
2.1 BASIC SERVICE TEST CASES 6
2.1.1 IMS Registration of the MS1 (a) 6
2.1.2 Operator Control of Service 7
2.1.3 MS1 (a) Calls MS2 (a), Both Roamed In VPMN (b) 7
2.1.4 PSTN Telephone in Country Containing PMN (b) Calls MS1 (a), Which Has Roamed to VPMN (b), but the VLR Has Lost The Record For MS1 (a) 8
2.1.5 PSTN Telephone In Country Containing PMN (b) Calls MS (a), Which Has Roamed To VPMN (b), But Has Performed IMSI Detach. 8
2.1.6 PSTN Telephone in Country Containing PLMN (b) Calls MS1 (a), Which Has Roamed to VPMN (b), but Is Not Able to Respond to Paging or Pre-Paging (Battery off) 9
2.2 Supplementary Service Test Cases 9
2.2.1 Barring of Outgoing International Calls 9
2.2.2 Barring of Outgoing International Calls – except Home Country 10
2.2.3 Barring of Incoming Calls - When Roaming 10
2.2.4 Emergency call 11
2.3 SMS TESTS 11
2.3.1 Mobile Originated and Terminated Short Message Service (SMS-MO and SMS-MT) 11
2.4 SMS TEST CASES 12
2.4.1 Information on the testing (SMS-IW) 12
2.4.2 Test Cases with Roaming Agreements 12
2.4.3 Test cases for Non-Roaming Scenario (SMS-Interworking) 15
3 Equipment Requirements 16
3.1 User equipment 16
3.2 Test equipment 17
4 Pre-Testing Data Exchange 17
4.1 Testing Contact Information 17
4.2 USIM associated data supplied by PMN(a) 18
Annex A Appendix 19
Annex B Document Management 20
Other Information 20

1 Introduction

1.1 Scope of document

This document is the specification of IREG end-to-end functional capability tests for voice and Short Message Service (SMS) over LTE relating to the international roaming of a Mobile Station (MS), belonging to a home Public Mobile Network (HPMN) (a), to and within a visited PMN (VPMN) (b).

Whilst it is expected that roaming will be a bilateral activity between two PMNs, please note that this document is written in a unidirectional context. Hence roaming is taking place by a MS (a) to VPMN (b) only. There is no reference to a MS (b) visiting PMN (a).

To complete IREG end-to-end functional capability tests for bilateral roaming, it is necessary to perform the tests in this document twice: the second time the real identities of PMN (a) and PMN (b) are swapped.

IREG Permanent Reference Document (PRD) IR.23 defines the scope and purpose of each stage of testing.

This document does not cover:

- Testing of High Speed Packet Access/Long Term Evolution (HSPA/LTE) data roaming
- Diameter Testing
- Exchange of PMN numbering, addressing and routing data [see Stage 3: IREG PRD IR.23]
- Testing of Transferred Account Procedure (TAP), billing applications and any inter-PMN financial statement; [see TADIG PRD TD.41]. However the production of a Toll Ticketing file, for use in the TADIG Stage 3 testing is included.
- Definition of operation and maintenance procedures such as contact points for fault reporting and notification of planned works. [see Stage 3: IREG PRD IR 23]

1.2 Objective of tests

The fundamental objective of this testing is to confirm the capability, and sample the quality of service which mobile users will receive when roaming from their HPMN (a) to PMN (b) in LTE. Consequently the tests are restricted to top-level capability testing. There is no provocative or inopportune behaviour testing: this type of testing forms part of the Stage 1 testing [see IREG PRD IR.23].

Because the testing is at a top-priority, its scope includes checking the correct working of user features and any network features required by the HPMN. The scope also includes the confirmation of acceptable quality of transmission, absence of echo and call set-up delay.

The overall objective of the tests is to confirm that the functions and features, which are already known to operate correctly within each separate PMN, will also operate correctly for Inter-PLMN roaming.

The specific objectives are to prove that:

- "Registration" can be successfully completed for MS (a) roaming to PMN (b). In addition, that the "de-registration" service operates correctly.
- Incoming speech calls to MS (a) can be handled by:
    - HPMN (a) successfully routing the call.
    - VPMN (b) connecting the call .
- Outgoing speech calls by MS (a) to the VPMN (b) are handled for:
    - Emergency calls
    - Calls to VPMN (b) country (that is local calls)
    - International calls
    - Calls to any other/relevant "Operator Services" on VPMN (b)/ Public Switched Telephone Network (PSTN) (b)
- Supplementary Services can be registered and activated, and their status interrogated by the MS (a).
- Specific Supplementary Services can be invoked successfully:
    - Specific Supplementary Services can be activated by a MS which is roamed.
    - Barring of Incoming Calls when roamed.
- Short Message Service is available between Home Country Service Centre and roamed mobile station.

If either the HPMN or VPMN contain IP Multimedia Subsystem/ Evolved Packet System (IMS/EPS) Network Entities which are supplied by more than one manufacturer, then the test cases should be repeated for each manufacturer. Therefore if HPMN (a) contains Home Subscriber Server (HSS) and Serving – Call Session Control Function (S-CSCF) from "m" suppliers, and the VPMN (b) contains Proxy – Call Session Control Function (P-CSCF) from "n" suppliers and all the different nodes can be used in a roaming scenario, then potentially the tests should be performed (m xn) times. The actual number of repeats of the test cases is for bilateral agreement between the HPMN and VPMN. However if agreement is not straightforward, it is for the HPMN to decide the scope of the repeating of test cases, because it is ultimately responsible to its customers for the service supported when roaming.

An associated optional objective is to use the Toll Ticketing function of the Visited Mobile Switching Centre (VMSC) to generate a live data file, which is used by the TADIG Stage 3 testing. After transfer to the HPMN via TADIG processes, the HPMN may use the information from the test results to validate the details of the Toll tickets, however this is not part of the GSM Association IREG roaming testing.

1.3 Definition of Terms

Term	Description
CLI	Calling Line Identity
HPMN	Home Public Mobile Network

HSPA	High Speed Packet Access
HSS	Home Subscriber Server
IMS/EPS	IP Multimedia Subsystem/ Evolved Packet System
IMSI	International Mobile Subscriber Identity
LTE	Long Term Evolution
MAP	Mobile Application Part
MS	Mobile Station
MSISDN	Mobile Subscriber ISDN Number
P-CSCF	Proxy – Call Session Control Function
PIN	Personal Identification Number
PMN	Public Mobile Network
PSTN	Public Switched Telephone Network
PUK	PIN Unblocking Key
TAP	Transferred Account Procedure
S-CSCF	Serving – Call Session Control Function
SIP	Session Initiation Protocol
SMS	Short Message Service
SMSC	Short Message Service Centre
UE	User Equipment
URI	Uniform Resource Identifier
USIM	Universal Subscriber Identity Module
VLR	Visitor Location Register
VMSC	Visited Mobile Switching Centre
VPMN	Visited Public Mobile Network

1.4 Document Cross-References

Ref	Document Number	Title
1	3GPP TR 21.905	Vocabulary for 3GPP Specifications
2	TD.41	Testing the Transferred Account Procedure (TAP)
3	IR.23	Organisation of GSM International Roaming Tests
4	IR.92	IMS Profile for Voice and SMS

2 Test Cases

The structure for testing international voice roaming and SMS interworking in LTE are recommended to be divided in three groups:

1. Basic Service (Mobility Management and Telephony)
2. Supplementary Services

3. Short Message Service (Point to point)

The test configuration is shown in Figure 1 below. It is anticipated that it may be necessary to monitor both signalling messages and voice calls on any of the Network Entity interfaces shown in the diagram. However this is not a firm requirement for this test specification.

The results of the test cases shall be recorded in Annex A: Appendix.

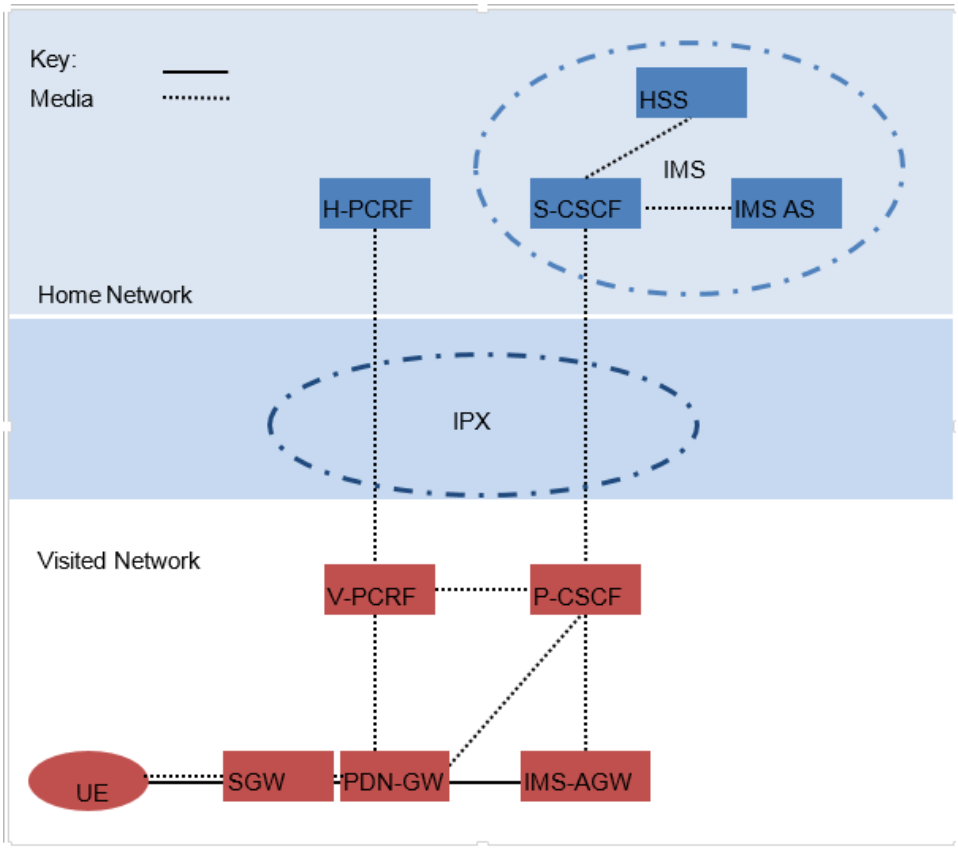

Figure 1: Test Configuration

To provide valid Toll Ticketing recording, then both the clock used to note call start and finish times for the test result sheets, and the internal P-CSCF clock must be checked against each other and set to an accuracy of better than five seconds. Note the P-CSCF clock must only be altered in conjunction with local operating rules and procedures because all Toll Tickets will be affected by any alteration.

2.1 BASIC SERVICE TEST CASES

It should be noted that no supplementary services are active during the test cases which are described in Section 2.1.

2.1.1 IMS Registration of the MS1 (a)

2.1.1.1 Preconditions

- MS1 (a) contains Universal Subscriber Identity Module (USIM) of HPMN (a).
- HSS record contains basic and supplementary service information.
- The P-CSCF internal database does not have the home network contact information.

2.1.1.2 Action

Power-up MS1 (a) and perform initial registration through a P-CSCF in the Visited Network (see 2.4.2.1 of IR.92). Check P-CSCF to see 200 OK message from S-CSCF; otherwise check record route of the 200 OK in the UE.

2.1.1.3 Expected Result

- Successful result if 200 OK arrives at the visited P-CSCF.
- Unsuccessful result if any of the basic and supplementary services tested by this document or all of the information is missing.

2.1.1.4 Comments

This test case confirms operation of registration through the P-CSCF of the visited Network. It checks the support of the relevant Session Initiation Protocol (SIP) operations in the visited network.

2.1.2 Operator Control of Service

2.1.2.1 Precondition

MS1 (a) has registered through a P-CSCF in the VPMN.

2.1.2.2 Actions

- Establish a MOC from MS1 (a).
- HPMN (a) personnel deletes MS1 (a) subscription from HSS.
- Check P-CSCF for de-registration message.

2.1.2.3 Expected Result

Successful result if P-CSCF record for MS1 (a) has been erased and when the established Mobile Originated Call (MOC) is cut.

2.1.2.4 Comments

This test case confirms that the de-registration procedure operates correctly and cuts the established call.

2.1.3 MS1 (a) Calls MS2 (a), Both Roamed In VPMN (b)

2.1.3.1 Precondition

MS1 (a) and MS2 (a) have location updated successfully in VPMN (b).

2.1.3.2 Actions

- MS1 (a) establishes call to MS2 (a).
- Call answered and held for one minute.
- Quality assessed

2.1.3.3 Expected Result

Successful result if call is established in 30 seconds, and call is stable in unanswered and answered phases, and there is no perceptible echo to both users, and call remains in intelligible/high quality conversation phase for one minute. See CCITT Rec P.84 Annex D

for instructions on use of Quality Scales. This test will also confirm the correct delivery of Calling Line Identity (CLI) information (or lack thereof) in a roaming scenario.

2.1.3.4 Comments

This test case confirms Mobile Originated and Mobile Terminated call sequences for roamers. It checks the ability to establish international call between the two PMNs using roaming numbers.

2.1.4 PSTN Telephone in Country Containing PMN (b) Calls MS1 (a), Which Has Roamed to VPMN (b), but the VLR Has Lost The Record For MS1 (a)

2.1.4.1 Precondition

MS1 (a) does not have a record in P-CSCF (b) but S-CSCF (a) indicates that MS1 (a) is register through P-CSCF (b).

2.1.4.2 Actions

- PSTN telephone (b2) calls MS1 (a).
- If call is successfully established, then maintain answered call for one minute. Assess quality.
- If call attempt returns "System Failure" message, then make MS1 (a) perform a location update, and repeat this test case.

2.1.4.3 Expected Result

Successful result if either first call-attempt is established or "System Failure" message is returned within 30 seconds. In addition the answered call, whether establish on the first attempt or after the location update, has no perceptible echo to either user, and that an acceptable quality connection can be maintained. See CCITT Rec P.84 Annex D for instructions on use of Quality Scales. This test will also confirm the correct delivery of CLI information (or lack thereof) in a roaming scenario.

2.1.4.4 Comments

This test case confirms the Visitor Location Register (VLR) recovery mechanism, which may use the Send Parameters Mobile Application Part (MAP) operation. It also checks that the Gateway MSC (in PLMN (a)) correctly inserts an echo cancellation device, and implies that other instances of echo control devices have been correctly configured.

2.1.5 PSTN Telephone In Country Containing PMN (b) Calls MS (a), Which Has Roamed To VPMN (b), But Has Performed IMSI Detach.

<<Text to be added later>>

2.1.6 PSTN Telephone in Country Containing PLMN (b) Calls MS1 (a), Which Has Roamed to VPMN (b), but Is Not Able to Respond to Paging or Pre-Paging (Battery off)

2.1.6.1 Precondition

PSTN telephone (b) calls MS1 (a) roamed to country (b) but no response to paging or pre-paging (Battery off) received.

2.1.6.2 Action

- Disable MS1 (a) so that it is unable to respond to invite [Note: MS1 (a) must not send de-register, while being disabled].The MS1 (a) remains IMS registered.
- Immediately attempt a call from PSTN telephone (b2) to MS1 (a).

2.1.6.3 Expected Result

Successful result if PSTN telephone (b) receives an announcement in the language of PMN (a) that MS1 (a) cannot be reached.

2.1.6.4 Comments

This test case confirms that the correct response is given when a call is made to a roamed mobile that does not respond to invite. Note that there will be some delay before the failure announcement is given while the invite is performed. The announcement will be in the language of PMN (a).

2.2 Supplementary Service Test Cases

These test cases require that the MS1 (a) is able to manage its own Supplementary Service registration and activation status. **Supplementary Services** are provided by the Telephony AS in the Home IMS, therefore there is no difference in testing SS in the VPMN or in the HPMN, except for:

2.2.1 Barring of Outgoing International Calls

This condition evaluates to true when the request URI of the outgoing SIP request contains a telephone number, (that is, a SIP URI with a "user" URI parameter set to "phone" or a tel URI); and does not point to a destination served by a network within the country where the originating user is located when initiating the call.

2.2.1.1 Preconditions

TAS configured with "BOIC:Active".

2.2.1.2 Action

i. MS(a) attempts an outgoing call to Home-PSTN-telephone(a)
ii. MS(a) attempts a call to the country, where the MS is presently located
iii. MS(a) attempts an international call to any other country than mentioned in (i) or (ii).

Note: the outgoing SIP request contains a telephone number, i.e. a SIP URI with a "user" URI parameter set to "phone" or a tel URI

2.2.1.3 Expected Result

Successful result if calls of test cases "i" and "iii" fail.

2.2.1.4 Comments

This test case confirms the ability of the home TAS to support BOIC.

2.2.2 Barring of Outgoing International Calls – except Home Country

This condition for international barring, excluding the home country, evaluates to true when the request URI of the outgoing SIP request: contains a telephone number, i.e. a SIP URI with a "user" URI parameter set to "phone" or a tel URI; does not point to a destination served by a network within the country where the originating user is located when initiating the call; and does not point to a destination served within the served user's home network.

2.2.2.1 Preconditions

TAS configured with "BOICexHC:Active".

2.2.2.2 Action

i. MS(a) attempts an outgoing call to Home-PSTN-telephone(a)
ii. MS(a) attempts a call to the country, where the MS is presently located
iii. MS(a) attempts an international call to any other country than mentioned in (i) or (ii).

Note: the outgoing SIP request contains a telephone number, i.e. a SIP URI with a "user" URI parameter set to "phone" or a tel URI

2.2.2.3 Expected Result

Successful result if calls of test cases "i" and "ii" succeeds, and the call of test case "iii" fails.

2.2.2.4 Comments

This test case confirms the ability of the home TAS to support BOICexHC.

2.2.3 Barring of Incoming Calls - When Roaming

This condition evaluates to true when the served user is registered from an access network other than the served user's home network.

2.2.3.1 Preconditions

TAS configured with "BAIC:Active".

2.2.3.2 Action

PSTN (b) calls MS(a).

2.2.3.3 Expected Result

Successful result, if calls fails

2.2.3.4 Comments

This test case confirms the ability of the home TAS to support BAIC.

2.2.4 Emergency call

2.2.4.1 Preconditions

- MS1 (a) contains USIM of HPMN (a).
- A barring of all outgoing calls is active.

2.2.4.2 Actions

Power-up MS1 (a) and perform an emergency call to:

- 112 and 911.
- A PSAP number of the visited Country.

2.2.4.3 Expected Result

Successful result if call is established with the Emergency response centre of the visited country.

2.2.4.4 Comments

This test checks the possibility to make an emergency both in the case of UE Detectable Emergency Session and in the case of non UE detectable Emergency Session.

2.3 SMS TESTS

2.3.1 Mobile Originated and Terminated Short Message Service (SMS-MO and SMS-MT)

2.3.1.1 Precondition

SMS- Mobile Originated / Terminated (MO/MT) Services is provisioned in HSS subscription. MS1 (a) and MS2 (a) are registered in VPMN (b).

2.3.1.2 Actions

- Switch on MS1 (a). Switch off MS2 (a).
- Use MS1 (a) to transmit a 160 character Short Message to MS2 (a) via the Home Country SMS - Service Centre with Message Waiting priority selected.
- Switch on MS2 (a).
- Await delivery of Short Message to MS2 (a) and check contents of Short Message with those transmitted.

2.3.1.3 Expected Result

Successful result if Short Message is correctly delivered within [2] minutes of switching MS2 (a) on.

2.3.1.4 Comments

This test case confirms correct operation of SMS - Mobile Originated / Terminated Services including "Message Waiting" and "Note MS Present" procedures.

2.4 SMS TEST CASES

2.4.1 Information on the testing (SMS-IW)

<<Text to be added later>>

2.4.2 Test Cases with Roaming Agreements

2.4.2.1 Mobile Originated SMS over IMS While Roaming (SMS-MO)

2.4.2.1.1 Objective:

Verify that an originating SMS over IMS is successfully submitted when UE is roaming in another PLMN.

2.4.2.1.2 Precondition:

- IMS Roaming Agreement is in place between operators of Home and Visited PMNs.
- UE 1 and UE 2 are IMS Registered. UE 1 is roaming.
- UEs support SMS over IMS profile as per IR.92.

2.4.2.1.3 Procedure:

- UE 1 sends an SMS to UE2. UE 1 encapsulates SMS data and sends it to its home SMSC over IMS APN using SIP MESSAGE.
- UE 1 receives a SIP 202 Accepted response from its home SMSC.
- If requested, UE 1 gets successful submission report back from its home SMSC over SIP MESSAGE.

2.4.2.1.4 Call Flow:

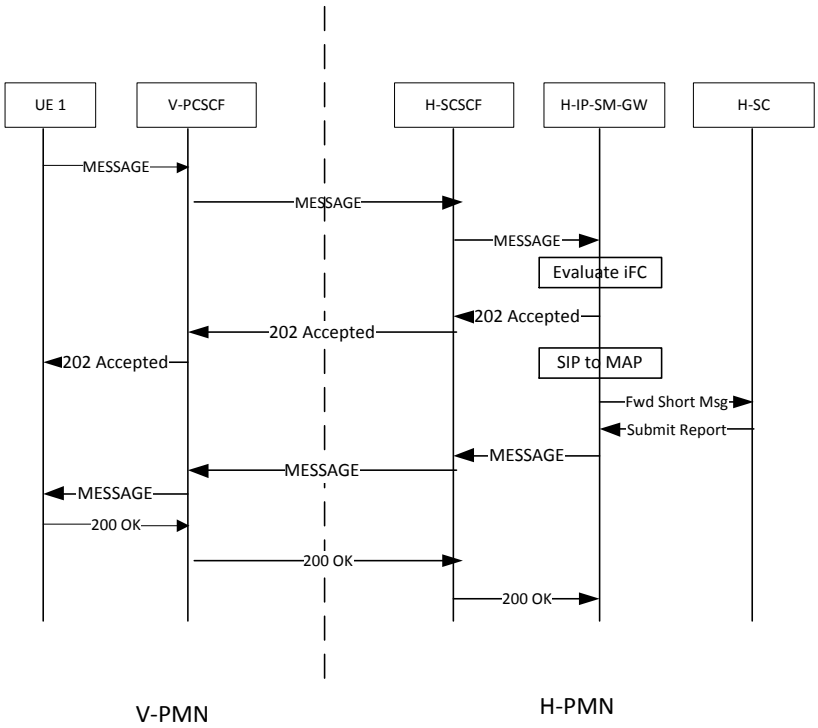

Figure 2: MO SMS Roaming Message Call Flow

Call Flow Details:

- The SIP MESSAGE contains the Request URI for UE 1's SMS SC either in SIP URI or tel URI format.
- Content type is set to application/vnd.3gpp.sms.
- Payload includes RP-DATA message where address of originating UE and destination SC is included. It also includes the SMS-SUBMIT TPDU where address of recipient UE is included.
- SIP Message gets routed to IP-SM-GW based on the Initial Filter Criteria defined in UE 1's service profile.
-

Pass Criterion:

- The SMS is successfully sent by the UE 1.
- Optionally, a successful acknowledgement of submission is received by UE 1.

2.4.2.2 Mobile Terminated SMS over IMS While Roaming (SMS-MT)

2.4.2.2.1 Objective:

Verify that a terminating SMS is successfully delivered over IMS when UE is roaming in another PLMN.

2.4.2.2.2 Preconditions:

- IMS Roaming Agreement is in place between operators of Home and Visited PLMNs.
- UE 1 and UE 2 are IMS Registered. UE 1 is roaming.
- UEs support SMS over IMS profile as per IR.92.

2.4.2.2.3 Procedure:

- UE 2 sends SMS to UE 1 which is roaming.
- UE 1 successfully receives the SMS over IMS APN and sends a SIP 200 OK response.
- UE 1 sends a delivery report back to IP-SM-GW. The delivery report is encapsulated in SIP message and routed over IMS APN using the SIP MESSAGE.

2.4.2.2.4 Call Flow:

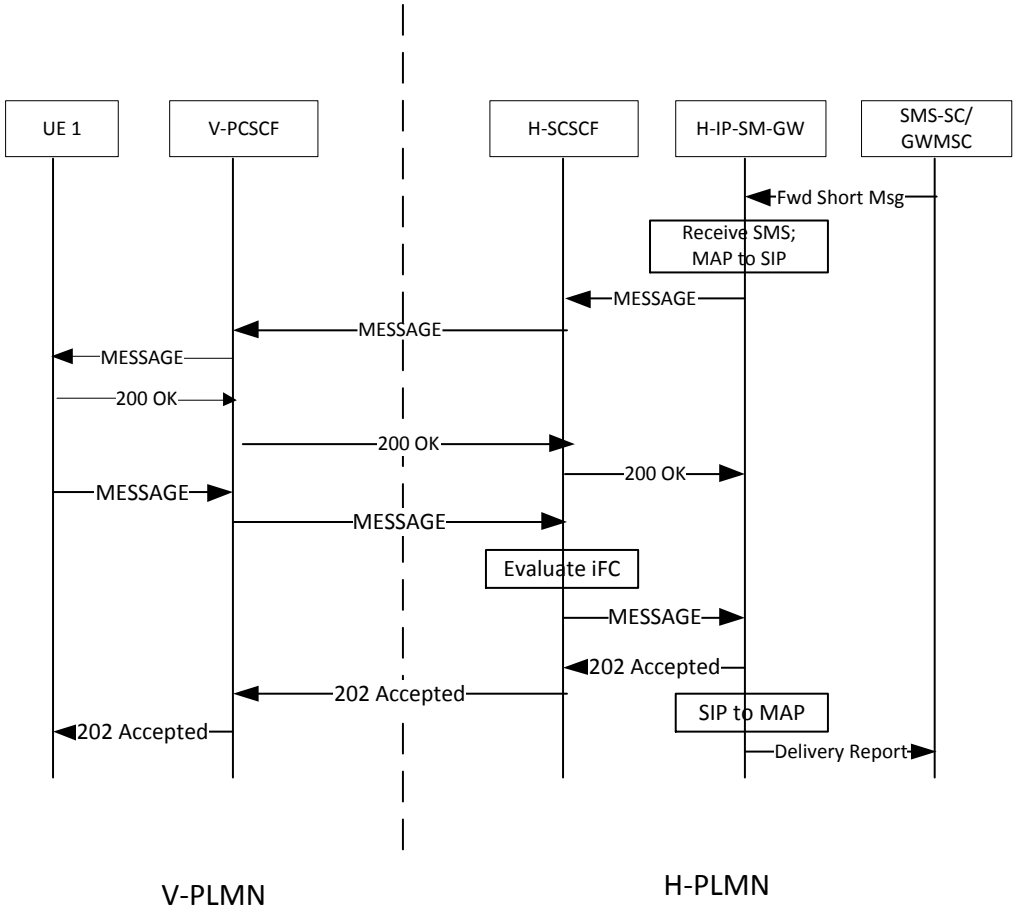

Figure 3: MT SMS Roaming Message Call Flow

Call Flow Details:

- IP-SM-GW receives the SMS from SMS SC and composes the SIP MESSAGE for delivery to the UE. It includes the Request URI which is the public user identify of UE 1. Also, Request-Disposition is set to no-fork stating that the SMS request is to be delivered to one UE only.
- Content type is set to application/vnd.3gpp.sms.
- Payload includes RP-DATA message with TPDU set to SMS-DELIVER.
- An optional delivery report may be transmitted back by UE 1.

Pass Criterion:

- The SMS is successfully received by UE 1.
- Optionally, a successful delivery report is transmitted back to the IP-SM-GW.

2.4.3 Test cases for Non-Roaming Scenario (SMS-Interworking)

2.4.3.1 SMS over IMS from MS(a) of PMN(a) to MS(b) of PMN(b) where PMN(a) and PMN(b) do not have roaming agreements in place

2.4.3.1.1 Objective:

Verify that UE 1 belonging to PMN 1 can send SMS to UE 2 belonging to PMN 2 when no roaming agreement is in place

2.4.3.1.2 Preconditions:

- No Roaming Agreement is in place between operators PMN 1 and 2.
- UE 1 and UE 2 are IMS Registered.
- UEs support SMS over IMS profile as per IR.92.

2.4.3.1.3 Procedure:

- UE 1 belonging to PMN 1 sends SMS to UE 2 belonging to PMN 2.
- UE 1 successfully sends the SMS over IMS APN and receives a SIP 200 OK response.
- UE 2 successfully receives the SMS over IMS APN.

2.4.3.1.4 Call Flow:

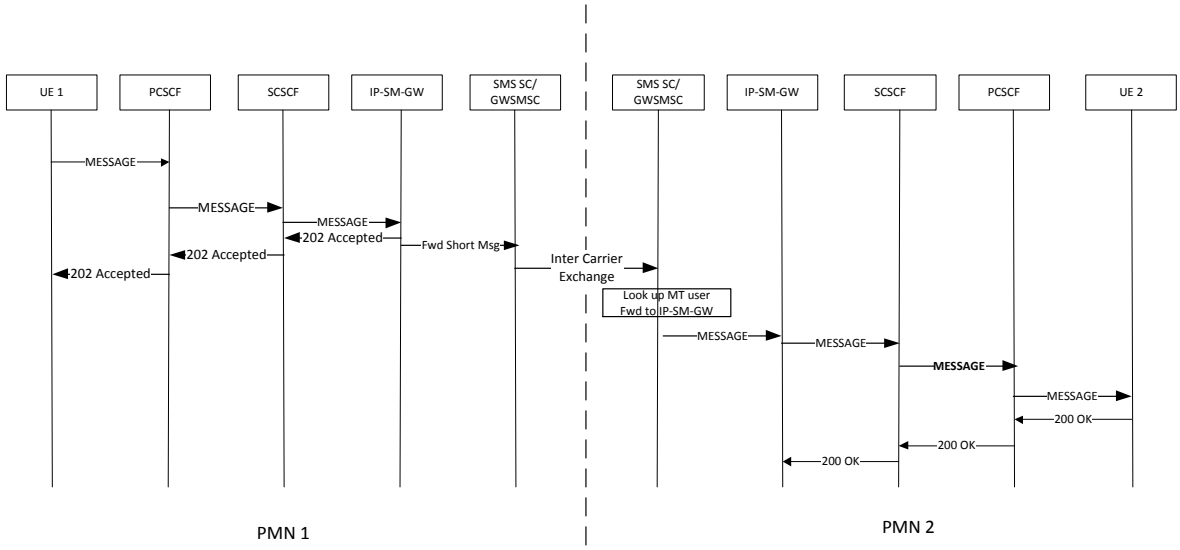

Figure 4: MO SMS Interworking Message Call Flow

Pass Criterion:

- UE 1 is able to successfully send the MO SMS.
- UE 2 is able to successfully receive the MT SMS.

2.4.3.2 SMS over IMS from UE 2 of PMN 2 to UE 1 of PMN 1 where PMN 1 and PMN 2 do not have roaming agreements in place

2.4.3.2.1 Objective:

Verify that UE 2 belonging to PMN 2 can send SMS to UE 1 belonging to PMN 1 when no roaming agreement is in place.

2.4.3.2.2 Precondition:

- No Roaming Agreement is in place between operators PMN 1 and 2.
- UE 1 and UE 2 are IMS Registered.
- UEs support SMS over IMS profile as per IR.92.

2.4.3.2.3 Procedure:

- UE 2 belonging to PMN 2 sends SMS to UE 1 belonging to PMN 1.
- UE 2 successfully sends the SMS over IMS APN and receives a SIP 200 OK response.
- UE 1 successfully receives the SMS over IMS APN.

2.4.3.2.4 Call Flow:

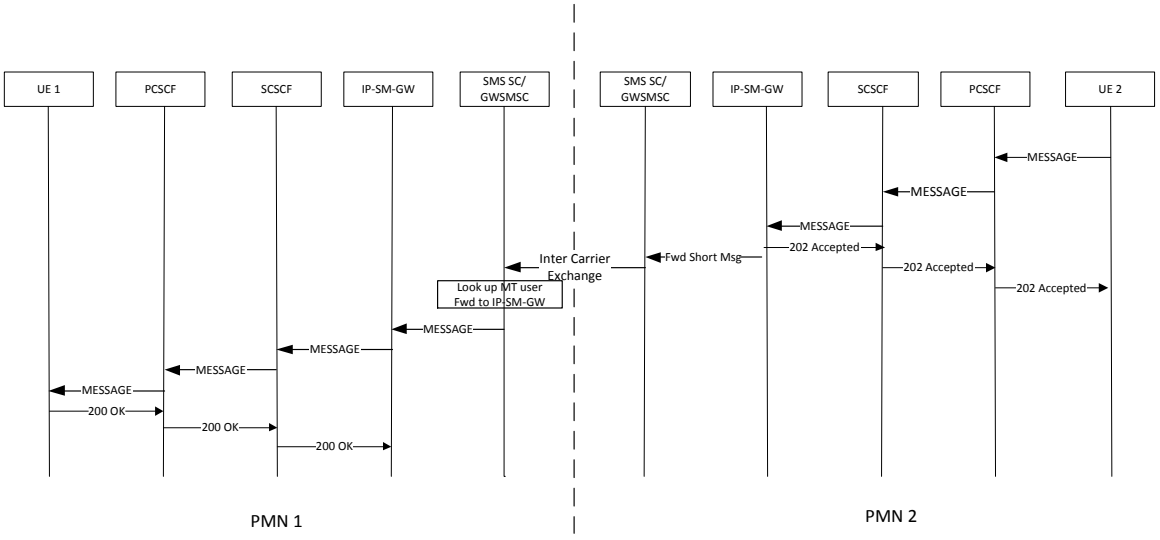

Figure 5: MT SMS Interworking Message Call Flow

Pass Criterion:

- UE 2 is able to successfully send the MO SMS
- UE 1 is able to successfully receive the MT SMS

3 Equipment Requirements

3.1 User equipment

The User Equipment requirements described in this Section are necessary for undertaking the test cases described in this document:

- Two Mobile Equipments supplied by VPMN (b).

- Two PSTN telephones in PSTN (b).
- Two USIMs supplied by HPMN (a). The supply of additional USIMs may be agreed by the HPMN(a) and VPMN(b), typically for the purposes of:
    - Spare cards in case of failure.
    - Allocation from different HSSs if applicable.
- Two USIMs supplied by VPMN (b).

It is expected that manual selection will be used to select VPMN (b) when using the USIMs supplied by HPMN (a). To facilitate subsequent automatic selection it is required that bits b6 and b5 of byte 2 of the USIM Service Table (Data-field 38) be set to "1", and the chosen VPLMN is in the PLMN Selector (Data-field 30).

In order to replicate the service that general roamers will encounter, it is required that any USIM used in the tests shall have one access class out of the classes 0-9 defined. No other access class (for example 10 or 11-15) shall be defined.

It is recommended that on any new USIM the Location Update Status field is set to "Status not updated" before the tests start (bit b2 set to "0" and bit b1 set to "1", of byte 11 of Data-field 7E).

3.2 Test equipment

The availability of an IP protocol analyser able to show SIP messages is highly advisable, but not strictly necessary for these tests. However it is essential for any analysis of test case failures. Because SIP signalling is encrypted between the UE and the P-CSCF this will be used only on the Mw interface

Clock capable of being used to allow testing personnel to record call start and chargeable start (that is, answer) time of calls to an accuracy of better than five seconds. If possible, the clock shall be adjusted to be in alignment with the internal P-CSCF clock which is used for the Toll Ticketing function.

Stopwatch capable of measuring perceived chargeable duration of calls to an accuracy of one second.

4 Pre-Testing Data Exchange

It is necessary for the two PMNs to have exchanged the pre-testing data defined in this Section prior to the commencement of testing.

4.1 Testing Contact Information

The following test Co-ordination contact information should be exchanged by both PLMNs:

- names,
- telephone numbers,
- fax numbers, and
- email address.

4.2 USIM associated data supplied by PMN(a)

The following information as stored in the SIM and/or HSS is required individually for each of the four SIMs.

- PIN, PUK/ (SUPER PIN).
- IMSI
- MSISDN
- Basic Service Subscription Information
- Public User Identities



IR25 Test cases.xls

Annex A Appendix

<<Text to be added later>>

Annex B Document Management

B.1 Document History

Version	Date	Brief Description of Change	Approval Authority	Editor / Company
1.0	19 Feb 2013	New PRD (IREG CR1001).Approved at PSMC#118	IREG #64 PSMC	Alfonso Della Fera, Telecom Italia

Other Information

Type	Description
Document Owner	IREG SIGNAL
Editor / Company	Alfonso Della Fera, Telecom Italia

It is our intention to provide a quality product for your use. If you find any errors or omissions, please contact us with your comments. You may notify us at prd@gsma.com

Your comments or suggestions & questions are always welcome.