

IMS Service Centralization and Continuity Guidelines

Version 10.0

10 November 2014

This is a Non-binding Permanent Reference Document of the GSMA

Security Classification: Non-confidential

Access to and distribution of this document is restricted to the persons permitted by the security classification. This document is confidential to the Association and is subject to copyright protection. This document is to be used only for the purposes for which it has been supplied and information contained in it must not be disclosed or in any other way made available, in whole or in part, to persons other than those permitted under the security classification without the prior written approval of the Association.

Copyright Notice

Copyright © 2014 GSM Association

Disclaimer

The GSM Association ("Association") makes no representation, warranty or undertaking (express or implied) with respect to and does not accept any responsibility for, and hereby disclaims liability for the accuracy or completeness or timeliness of the information contained in this document. The information contained in this document may be subject to change without prior notice.

Antitrust Notice

The information contain herein is in full compliance with the GSM Association's antitrust compliance policy.

Table of Contents

1 Introduction 3
1.1 Overview 3
1.2 Scope 3
1.3 Abbreviations 3
1.4 References 4
2 Service Centralization in the IMS 5
2.1 General 5
2.1.1 Anchoring when using PS access 5
2.1.2 Anchoring when using CS access 5
2.2 Service Data 7
3 Terminating Access Domain Selection 9
4 SRVCC 10
4.1 General 10
4.2 Impacted entities 10
4.3 SRVCC Architecture 11
4.3.1 Overview 11
4.4 Support of mid-call state and calls in alerting state 13
4.4.1 Overview 13
4.4.2 UE impacts 14
4.4.3 Network impacts 14
4.5 SRVCC Architecture for emergency calls 14
4.5.1 UE impacts 15
4.5.2 Network impacts 15
4.6 Handling of non-voice media during SRVCC 15
Annex A (informative): Issues with initial deployments for Service Centralization in the IMS 16
A.1 General 16
A.2 Issue 1: Anchoring of all calls in IMS 16
A.2.1 Overview 16
A.2.2 Guidelines to resolve issue 1 16
A.3 Issue 2: Support for MSC Server enhanced for ICS 19
A.3.1 Overview 19
A.3.2 AGuidelines to resolve issue 2 20
A.4 Issue 3: Use of CAMEL home routeing during roaming scenario 20
A.4.1 Overview 20
A.4.2 Guidelines to resolve issue 3 20
A.5 Issue 4: Deployment of SCC AS 20
A.5.1 Overview 20
A.5.2 Guidelines to resolve issue 4 20
Annex B Document Management 22
B.1 Document History 22
B.2 Other Information 23

1 Introduction

1.1 Overview

The 3rd Generation Partnership Project (3GPP) has specified the solution for centralization of services in the IP Multimedia Subsystem (IMS) and of IMS based service continuity in Release 8 onwards. The user shall receive services in a consistent manner when the user accesses IMS either via the Circuit Switched (CS) or the Packet Switched (PS) domain. Service continuity is supported between CS and PS domains.

1.2 Scope

This document provides guidelines for the centralization of IMS services and IMS based service continuity for single radio devices [3] by listing a number of Evolved Packet Core, IMS core, and User Equipment (UE) features on top of the features defined in [11]. The defined guidelines are compliant with 3GPP specifications. Guidelines are provided for the interface between UE and network and for the network architecture. The centralization of IMS services is focused on the network based solution; the UE based IMS Centralized Services (ICS) solution is out of scope of this document and not recommended. IMS based service continuity is focused on Single Radio Voice Call Continuity (SRVCC) from E-UTRAN (Evolved Universal Terrestrial Radio Access Network) to GERAN/UTRAN and from HSPA (High Speed Packet Access) to GERAN; other service continuity scenarios are out of scope.

UE impacts of each feature are described in a separate subsection where applicable.

1.3 Abbreviations

Term	Description
3GPP	3rd Generation Partnership Project
ATCF	Access Transfer Control Function
ATGW	Access Transfer Gateway
BGCF	Breakout Gateway Control Function
CN	Core Network
CS	Circuit Switched
CSCF	Call Session Control Function
DTM	Dual Transfer Mode
eNB	eNodeB
EPS	Evolved Packet System
EATF	Emergency Access Transfer Function
EDGE	Enhanced Data rates for GSM Evolution
E-CSCF	Emergency CSCF
E-UTRAN	Evolved Universal Terrestrial Radio Access Network
GERAN	GSM/EDGE Radio Access Network
GGSN	Gateway GPRS Support Node
GSM	Global System for Mobile communications
HSPA	High Speed Packet Access
HSS	Home Subscriber Server
ICS	IMS Centralized Services
iFC	Initial Filter Criteria
IMRN	IMS Routing Number
IMS	IP Multimedia Subsystem
IMS AGW	IMS Access Gateway
LTE	Long Term Evolution

Term	Description
MGCF	Media Gateway Control Function
MGW	Media Gateway
MMTel	Multimedia Telephony
MS	Mobile Station
MSC	Mobile Switching Centre
MS-ISDN	Mobile Subscriber ISDN Number
PCC	Policy and Charging Control
PCRF	Policy and Charging Rules Function
P-CSCF	Proxy – CSCF
PS	Packet Switched
QCI	Quality of Service Class Indicator
RAT	Radio Access Technology
RAU	Routing Area Update
RTP	Real Time Protocol
SCC AS	Service Centralization and Continuity Application Server
S-CSCF	Serving CSCF
SGSN	Serving GPRS Support Node
SIP	Session Initiation Protocol
SRVCC	Single Radio Voice Call Continuity
T-ADS	Terminating Access Domain Selection
TAS	Telephony Application Server
TAU	Tracking Area Update
TrGW	Transition Gateway
UE	User Equipment
UTRAN	Universal Terrestrial Radio Access Network

1.4 References

Ref	Doc Number	Title
[1]	3GPP TS 23.060	General Packet Radio Service (GPRS); Service description; Stage 2
[2]	3GPP TS 23.167	IP Multimedia Subsystem (IMS) emergency sessions
[3]	3GPP TS 23.216	Single Radio Voice Call Continuity (SRVCC); Stage 2
[4]	3GPP TS 23.237	IP Multimedia Subsystem (IMS) Service Continuity; Stage 2
[5]	3GPP TS 23.292	IP Multimedia Subsystem (IMS) centralized services, Stage 2
[6]	3GPP TS 23.401	General Packet Radio Service (GPRS) enhancements for Evolved Universal Terrestrial Radio Access Network (E-UTRAN) access
[7]	3GPP TS 24.008	Mobile radio interface layer 3 specification; Core Network protocols; Stage 3
[8]	3GPP TS 24.237	IP Multimedia Subsystem (IMS) Service Continuity; Stage 3
[9]	3GPP TS 29.292	Interworking between the IP Multimedia (IM) Core Network (CN) subsystem and MSC Server for IMS Centralized Services (ICS)
[10]	3GPP TS 23.221	Architectural requirements
[11]	GSMA PRD IR.92	IMS Profile for Voice and SMS
[12]	3GPP TS 23.203	Policy and charging control architecture
[13]	3GPP TS 23.228	IP Multimedia Subsystem (IMS); Stage 2
[14]	3GPP TS 29.205	Application of Q.1900 series to bearer independent Circuit Switched (CS) core network architecture; Stage 3
[15]	3GPP TS 29.163	Interworking between the IP Multimedia (IM) Core Network (CN) subsystem and Circuit Switched (CS) networks
[16]	GSMA PRD IR.94	IMS Profile for Conversational Video Service
[17]	GSMA PRD IR.58	IMS Profile for Voice over HSPA
[18]	GSMA PRD IR.65	IMS Roaming & Interworking Guidelines
[19]	3GPP TS 24.292	IP Multimedia (IM) Core Network (CN) subsystem Centralized Services (ICS); Stage 3

2 Service Centralization in the IMS

2.1 General

3GPP has specified in [4] and [5] the principles for centralization and continuity of services in the IMS in order to provide consistent services to the user regardless of the attached access type. In order to support this principle, originated and terminated sessions via the CS or PS domains need to be anchored in the Service Centralization and Continuity Application Server (SCC AS) in the IMS. The SCC AS must be inserted in the session path using originating and terminating initial Filter Criteria (iFC) [13]; it is configured as the first AS in the originating iFC and as the last AS in the terminating iFC chain.

2.1.1 Anchoring when using PS access

The SCC AS must anchor originated and terminated sessions when using the PS access as specified in [4].

2.1.2 Anchoring when using CS access

The SCC AS must anchor originated and terminated sessions when using the CS access as specified in [5]. Originated sessions are routed from the Mobile Switching Centre (MSC) Server enhanced for ICS in the VPLMN to the Serving Call Session Control Function (S-CSCF) in the Home Public Land Mobile Network (HPLMN) and the SCC AS and the Telephony Application Server (TAS) are invoked, that is the SCC AS is the first invoked AS (see also Figure 2.1.2-1). Terminating sessions are routed to the S-CSCF and the TAS and the SCC AS are invoked before routing the session to the MSC Server in the VPLMN, that is the SCC AS is the last invoked AS. The interworking between the IMS and the MSC Server enhanced for ICS for originated, terminated and mid-call services is specified in [9].

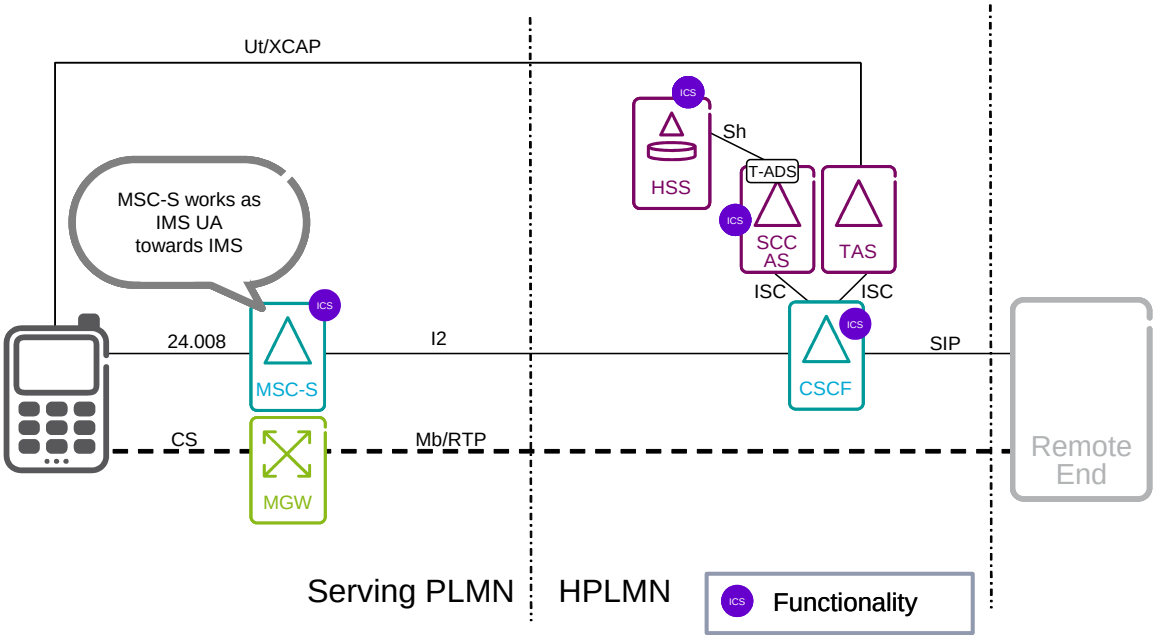

Figure 2.1.2-1: Anchoring in the IMS when using MSC Server enhanced for ICS

The MSC Server must set the “phone-context” parameter as defined in section 7.2A.10 in 3GPP TS 24.229. That is, for home local numbers the MSC Server must set the “phone-

context" parameter to the home domain name, as it is used to address the SIP REGISTER request. The MSC Server has the option to support geo-local numbers. If the MSC Server supports geo-local numbers, it must set the "phone-context" parameter as with home local numbers, but prefixed by the "geo-local" string, according to the Alternative 8 in Section 7.2A.10.3 in 3GPP TS 24.229.

In deployments not using the MSC Server enhanced for ICS, originated and terminated services are also provided in the IMS, but mid-call and presentation services must be provided in the subscriber data sent to the MSC such that the MSC can provide these services, see section 7.6.3 of [5]. 3GPP describes in [5] how to route originated sessions from the MSC to the IMS by fetching an IMS Routing Number (IMRN) via CAMEL and how to route terminated session from the IMS to the MSC. Originated sessions are routed from the MSC Server in the VPLMN via a Media Gateway Control Function (MGCF) in the HPLMN to the S-CSCF and the SCC AS and the Telephony Application Server (TAS) are invoked (see also Figure 2.1.2-2). The MSC needs to fetch a routing number from the Service Control Point (SCP).

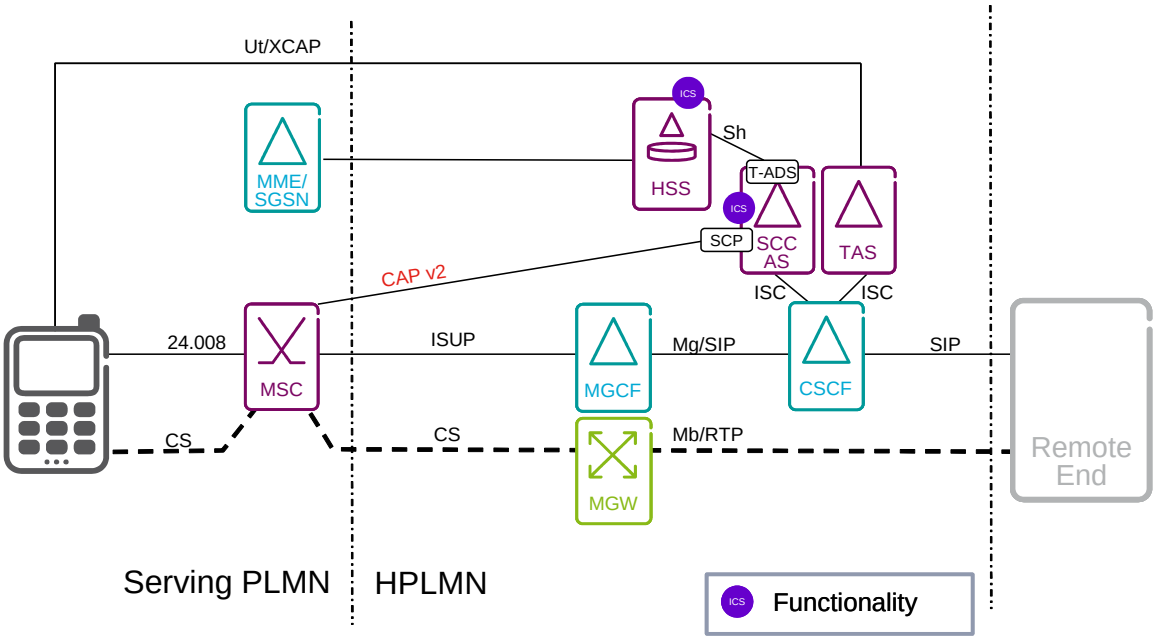

Figure 2.1.2-2: Anchoring in the IMS when using MSC not enhanced for ICS: origination

In deployments where Integrated Services Digital Network User Part (ISUP) does not provide original called number and calling party number, the SCC AS needs to discover this information by interacting with the SCP (for example GSM Service Control Function (gsmSCF)). The interaction between SCP and SCC AS for this purpose is not specified in 3GPP, see section 7.3.2.1.3 of [5].

Terminating sessions are routed to the S-CSCF and the TAS and the SCC AS are invoked before routing the session via Breakout Gateway Control Function (BGCF) (not shown) and Media Gateway Controller Function (MGCF) in the HPLMN to the MSC in the VPLMN (see also Figure 2.1.2-3).

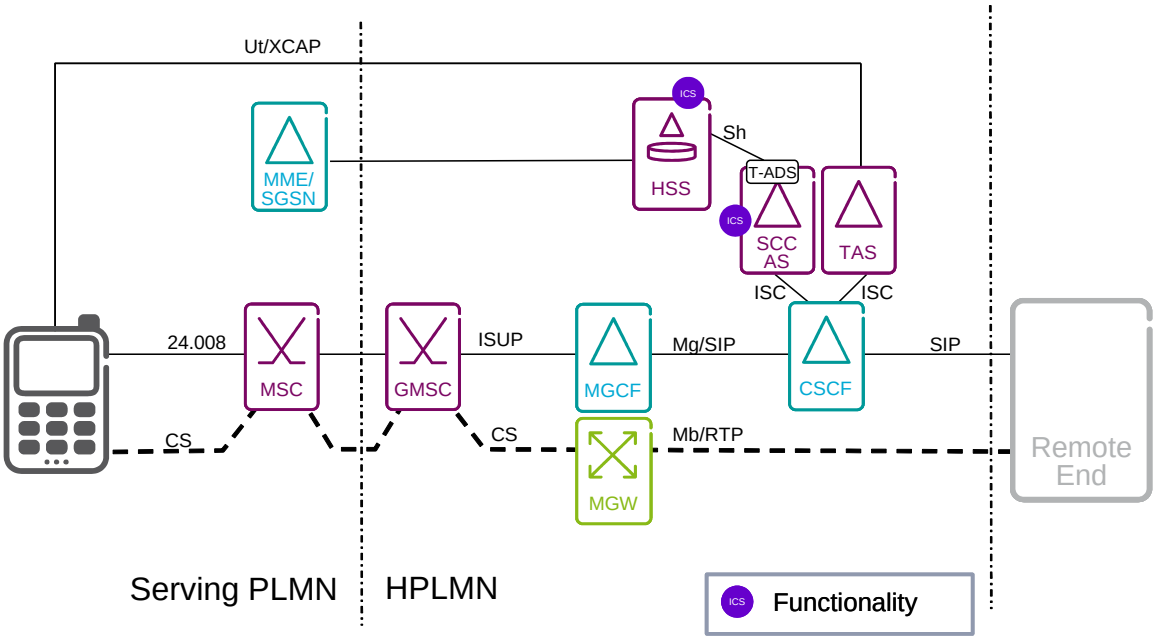

Figure 2.1.2-3: Anchoring in the IMS when using MSC not enhanced for ICS: termination

Solutions for routing a terminated session from the Public Switched Telephone Network (PSTN) domain to the IMS are described in [5], Annex F.

CS emergency calls and SMS are not centralized in the IMS, that is, they are handled as CS service when camping on CS access.

NOTE: CS data and fax have been included in Release 10 into [5] but are out of scope of this document.

2.2 Service Data

An user has both IMS service data for the service execution in the TAS and CS service data in the HSS. The latter is needed to ensure that CS access can be used for origination and termination.

The IMS service data in the TAS may include all supplementary services as defined in clause 2.3.1 in [11].

For the CS service data in the HSS, Table 2.2-1 provides an overview which supplementary services must be provisioned (see also Appendix A.2.2 for further considerations regarding supplementary services and see [11] for details of the supplementary services). These supplementary services are only used by an MSC not enhanced for ICS, see section 7.6.3 of [5].

NOTE 1: The UE can only manage the IMS supplementary services (see [11]) and there is no need for synchronization between the CS and IMS domain because the full control of forwarding, barring and presentation services is centralized in the IMS.

An MSC Server enhanced for ICS ignores the CS supplementary service data from the HSS.

NOTE 2: Even if MSC Server enhanced for ICS is deployed in the HPLMN, MSC Server not enhanced for ICS could be used when roaming.

IMS Supplementary Service	Corresponding CS Supplementary Service	CS Supplementary Services provisioned and activated in the HSS
Originating Identification Presentation	Calling Line Identification Presentation	Yes
Terminating Identification Presentation	Connected Line Identification Presentation	Yes
Originating Identification Restriction	Calling Line Identification Restriction	Yes if also provisioned and activated, or generally available in the IMS
Terminating Identification Restriction	Connected Line Identification Restriction	No
Communication Forwarding Unconditional	Call Forwarding Unconditional	No
Communication Forwarding on not Logged in	Not applicable	Not applicable
Communication Forwarding on Busy	Call Forwarding on Mobile Subscriber Busy	No
Communication Forwarding on not Reachable	Call Forwarding on Mobile Subscriber not Reachable	No
Communication Forwarding on No Reply	Call Forwarding on No Reply	No
Barring of All Incoming Calls	Barring of All Incoming Calls	No
Barring of All Outgoing Calls	Barring of All Outgoing Calls	No
Barring of Outgoing International Calls	Barring of Outgoing International Calls	No
Barring of Outgoing International Calls – ex Home Country	Barring of Outgoing International Calls – ex those directed to the Home PLMN Country	No
Barring of Incoming Calls	Barring of All Incoming Calls	No
Communication Hold	Call Hold	Yes if also provisioned and activated in the IMS or Hold is used without announcements
Message Waiting Indication	Not applicable	Not applicable
Communication Waiting	Call Waiting	Yes See Note 3.
Ad-Hoc Multi Party Conference	Multi-Party Service	Yes if also provisioned and activated in the IMS

Table 2.2-1 CS Supplementary services in the HSS when using MSC Server not enhanced for ICS

NOTE 3: Terminal-based Communication Waiting requires that the IMS supports more than one call per user. The CS supplementary Call Waiting needs to be activated such that the terminal is presented with a new incoming call when using the CS access. See also IR.92 [11].

The Originating Identification Restriction and Calling Line Identification Restriction services must have the same default behaviour on temporary mode (i.e., either both with presentation restricted or presentation not restricted), and service configuration for Originating Identification Restriction service is not allowed. See also IR.92 [11].

3 Terminating Access Domain Selection

Terminating Access Domain Selection (T-ADS) selects CS access or PS access network(s) to be used to deliver a terminating voice session to the UE. In 3GPP [4,5], also the case of selecting multiple PS accesses is covered, however, this use case is out scope of this document. T-ADS is a functionality located in the IMS in the SCC AS and specified in [4,5] and must be present in any deployment in which IMS Voice over Internet Protocol (VoIP) capable radio coverage is complemented with the CS radio access for voice.

In order to accurately determine whether to route to CS or PS access, the SCC AS must know whether the UE that is registered in the IMS is currently camping on an IMS Voice over PS capable access (for example on E-UTRAN). For this purpose, network-based T-ADS has been specified in [1,4,6,10] in 3GPP Release 9. It adds the capability to the SCC AS to query the Home Subscriber Server (HSS) for the IMS Voice over PS supported indication. If the subscriber is registered in both Serving GPRS Support Node (SGSN) and Mobility Management Entity (MME) (see also 'dual registration' of MME and SGSN as specified in [1,6]) and if the IMS voice over PS support differs between MME and SGSN, then the HSS queries the SGSN and the MME to request the time of the last radio access and the IMS Voice over PS supported indication (see also Figure 3-1).

The procedure requires that the UE performs Routing Area Update (RAU) and Tracking Area Update (TAU) when moving between routing areas and tracking areas with different IMS Voice over PS support (see also section A.2 in [11]).

The T-ADS selects the CS access for termination in the following cases:

- The UE is not registered in the IMS.
- The UE is registered in the IMS but not camping on an IMS Voice over PS capable access.
- The UE is only registered in the IMS by an MSC Server enhanced for ICS as specified in [4].

If there is an existing IMS voice session for a UE (see sections 2.1.1 and 2.1.2 for anchoring sessions in the SCC AS), then the T-ADS in the SCC AS must route all further IMS voice sessions for the same UE to the same domain as the existing IMS voice session without querying the IMS Voice over PS supported indication from the HSS, as specified in 3GPP Release 10 section 10.4.2 of TS 24.292 [19].

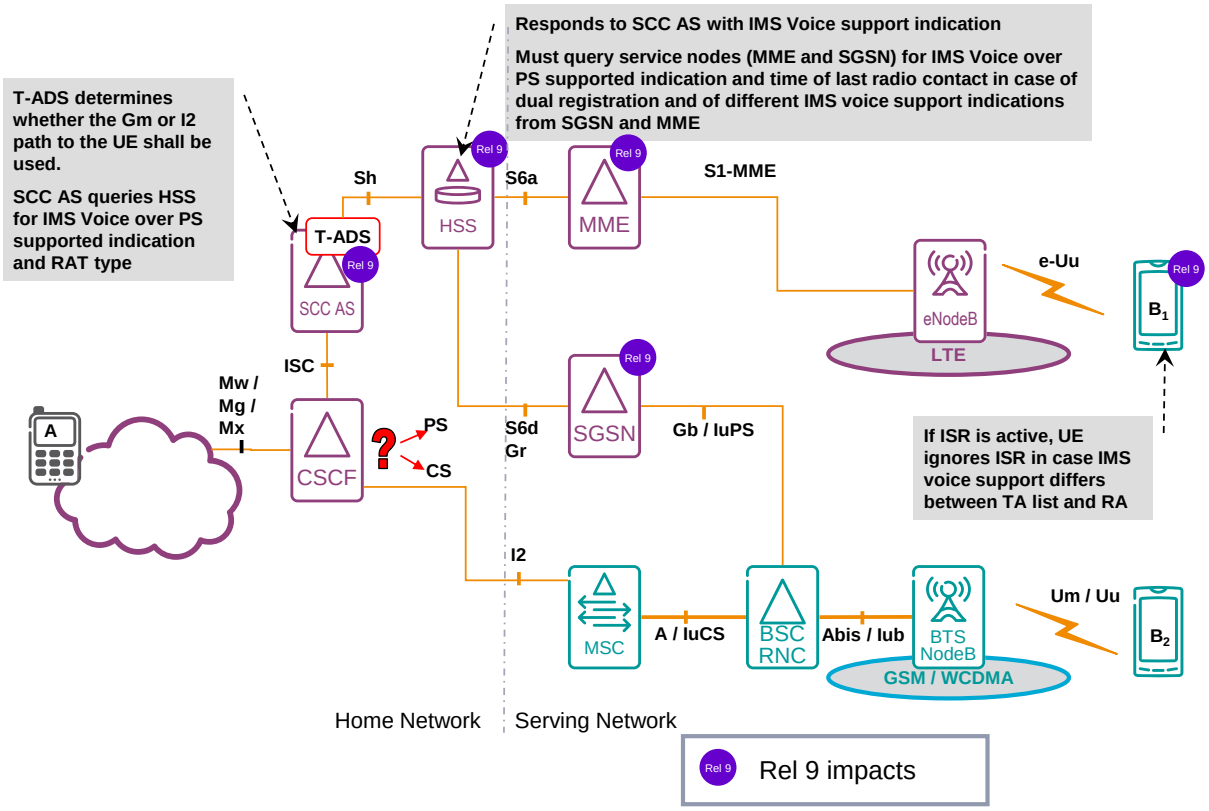

Figure 3-1: Network-based T-ADS

The interface between S-CSCF and MSC in Figure 3-1 can also be “Session Initiation Protocol (SIP) interface” as specified in [8]. The S-CSCF can also use the Mg interface to an MGCF in the HPLMN and between the MGCF and the MSC the ISUP interface is used. The interface between S-CSCF and MSC in the figure can also be Mg in non-roaming scenarios.

4 SRVCC

4.1 General

SRVCC has been specified initially in 3GPP Release 8 in [3,4] to support the transfer of one single active call / session from E-UTRAN to 2G/3G CS and HSPA to 2G CS.

NOTE: SRVCC from HSPA to 3G CS is not covered by this recommendation.

Transfer of mid-call state and additional calls using MSC Server assisted mid-call feature was introduced in 3GPP Release 10 (see section 4.4). Also in Release 10, SRVCC support for calls in alerting state (see section 4.4) and SRVCC enhancements to minimize voice interruption delay (see section 4.3) were specified. SRVCC must be supported in any deployment in which IMS VoIP capable radio coverage is complemented with the CS radio access for voice.

4.2 Impacted entities

SRVCC from E-UTRAN to 2G/3G CS requires support in the UE, eNodeB (eNB), MME, Public Data Network Gateway (PGW) , P-CSCF, Access Transfer Control Function (ATCF), and MSC Server in the VPLMN and in SCC AS and HSS in the HPLMN as shown in Figure

4.3.1-1 and as specified in [3,4,7,8]. In addition, Policy and Charging Control (PCC) is impacted [12].

For an S4 based SGSN, SRVCC from HSPA to 2G CS has the same impacts as SRVCC from E-UTRAN to 2G/3G as depicted in Figure 4.3.1-1, but with the following exceptions:

- Instead of the eNodeB the source UTRAN is impacted
- Instead of the MME the SGSN is impacted.

For an Gn based SGSN, the Gateway GPRS Support Node (GGSN) instead of the PGW is impacted. Figure 4.3.1-2 shows an S4 based SGSN as both source and target serving node, but use of a Gn based SGSN is possible as well either as source, or target or both source and target serving node.

NOTE: SRVCC from E-UTRAN to 2G/3G has an impact on PGW, P-CSCF and PCC because during SRVCC the MME deletes the PS bearer used for voice media [3]. The PGW is notified of the loss of bearer with a cause code that this is due to SRVCC. PCC [12] is notified of the loss of bearer with the same cause code and in turn informs the P-CSCF that this loss of bearer is due to SRVCC and hence part of the mobility procedure.

4.3 SRVCC Architecture

4.3.1 Overview

To minimize the voice interruption delay, 3GPP has specified in Release 10 the SRVCC architecture as shown in Figure 4.3.1-1 [4.8]. The ATCF and Access Transfer Gateway (ATGW) are deployed in the VPLMN. An ATCF can be co-located with existing nodes, for example, P-CSCF or Interconnection Border Control Function (IBCF). An existing MGW is used in case of ATGW. The interface between ATCF and MSC in the figure can also be “SIP interface” as specified in [8].

The possible cause for the possible long voice interruption in SRVCC Pre-Release 10 is related to the following two procedures:

1. The interaction between MSC Server and SCC AS for transferring the session and the update of the remote end with new media information (Session Description Protocol (SDP)).
2. The interaction between the MSC Server and SCC AS is in roaming cases over the NNI and the remote end update requires an SDP offer/answer exchange towards the remote party.

The latter ensures that the remote party voice RTP stream is changed toward the MGW controlled by the MSC Server. Considering that one or both parties involved in a call subject for SRVCC might be roaming, then the voice interruption is negatively influenced by the interaction between the involved VPLMNs and HPLMNs and due to long round-trip time of the remote party update.

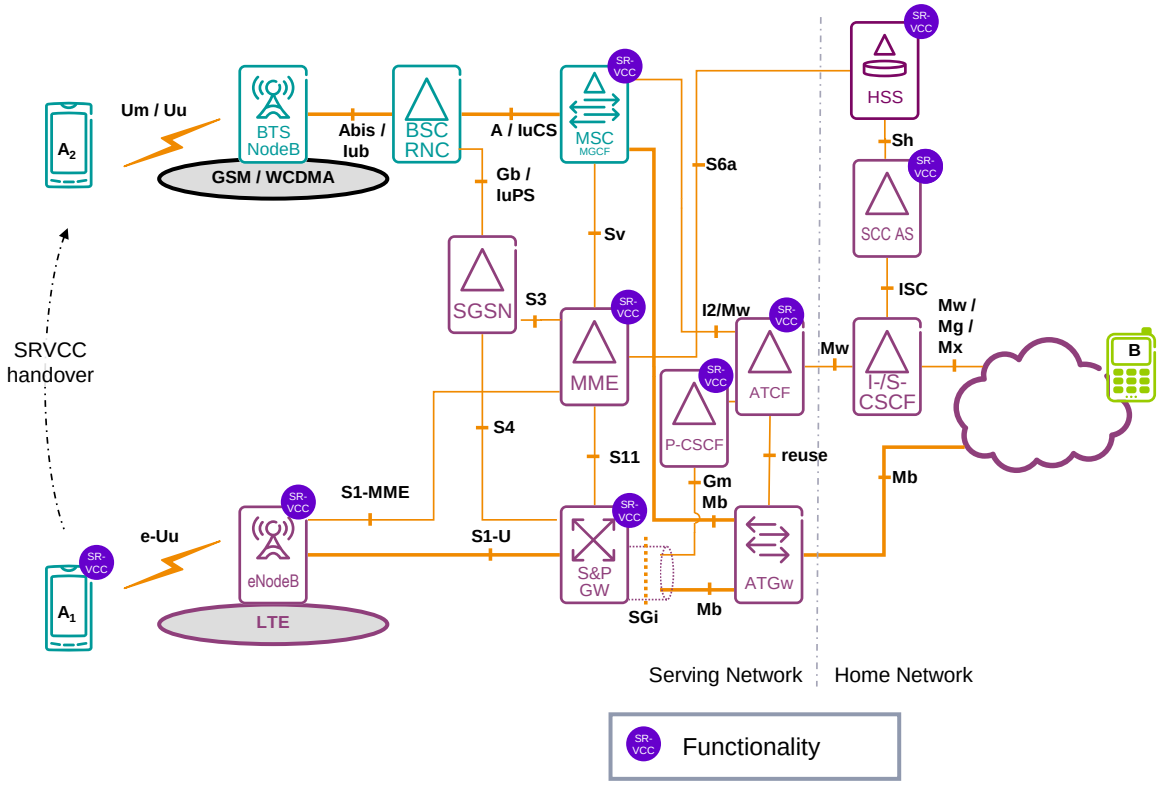

Figure 4.3.1-1: Enhanced SRVCC R10 Architecture - E-UTRAN to GERAN/UTRAN

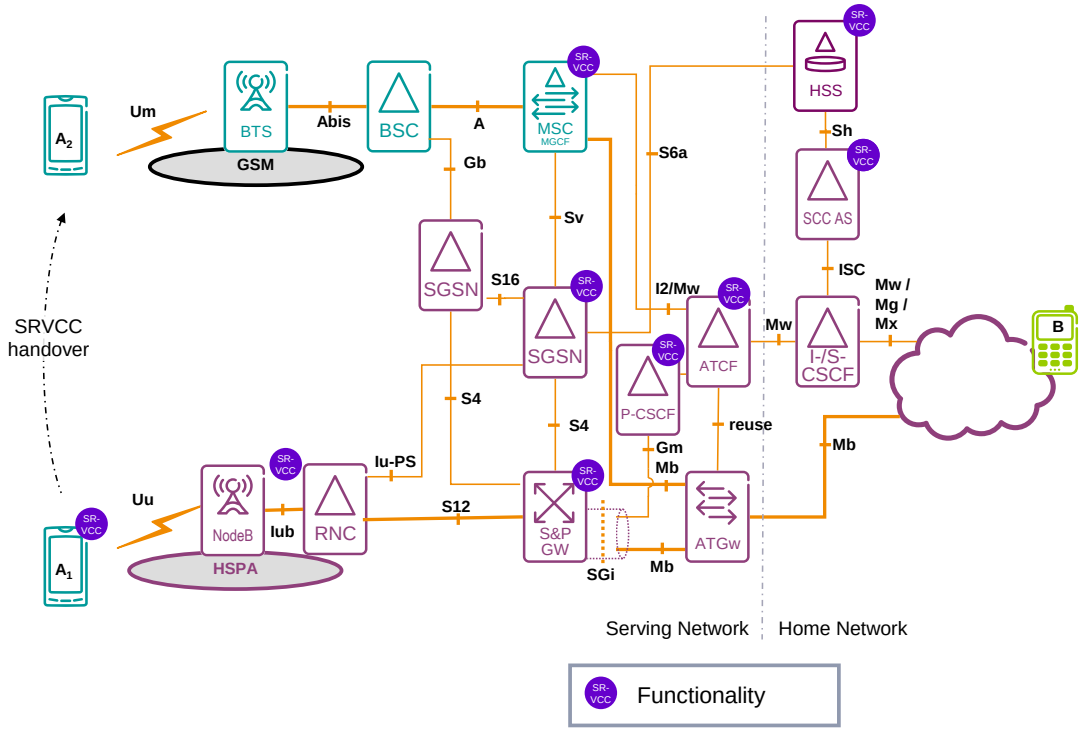

Figure 4.3.1-2: Enhanced SRVCC R10 Architecture - HSPA to GERAN

Hence enhanced SRVCC Rel 10 architecture introduced the ATCF and the ATGW. The ATCF acts as SIP signalling anchor and is located in the SIP signalling path between P-SCSF and S-CSCF. Both the ATCF and ATGW are located in the serving network. The ATCF controls the ATGW, where the media plane is anchored. For the ATGW, no additional

MGW has to be deployed, but one of the existing media gateways can be used, for example, IMS-AGW, Transition Gateway (TrGW), or CS-MGW. It is recommended to always anchor the media in the ATGW during session establishment as specified in section 5.3.4.2 in [4].

During the session transfer, the ATCF establishes a new session with the SCC AS. This new session substitutes the old session between the ATCF and the SCC AS [8].

Both ATCF and ATGW are needed to ensure that:

- The session transfer request send by MSC Server enhanced for SRVCC [3,4] does not need to be routed to the HPLMN.
- Remote end update is not needed.

Prior to performing SRVCC, all originated and terminated sessions on E-UTRAN/HSPA are anchored in the SCC AS, as described in section 2.1.1. After the handover to CS access, the transferred sessions stayed anchored in the SCC AS and newly originated and terminated sessions are anchored in the SCC AS, as described in section 2.1.2. For all terminated sessions, T-ADS is executed as described in section 3.

The SCC AS in the home network provides session state information in the case MSC Server assisted mid-call feature is supported and used, and continues to handle T-ADS related functionality.

When IP interconnect towards the remote end is used also in non-roaming scenario as described in Section 5.2 of IR.65 [18], it is recommended that the home network deploys both ATCF and ATGW. This ensures that the remote end update is not needed.

4.4 Support of mid-call state and calls in alerting state

4.4.1 Overview

MSC Server assisted mid-call feature is specified in [4,8,12] in 3GPP Release 10. It adds to SRVCC the support to transfer:

- Single held call
- One active and one held call
- Conference call state including participants. Conference call can be the active or the held call.

SRVCC for calls in alerting state is specified in [4,8,12] in 3GPP Release 10. It adds to SRVCC the support to transfer:

- Single call in alerting state
- Call in alerting state while there is an established session in place. The established session is an active or held session and can be a conferencing session.

NOTE 1: Support of both mid-call feature and alerting state feature is required to support combinations of held, conferencing and alerting state.

NOTE 2: As specified in [4], SRVCC with mid-call and alerting does not require IMS registration / I2 unless for the conference service to be supported after the transfer.

4.4.2 UE impacts

The UE impacts required to support during SRVCC mid-call state and calls in alerting state are specified in [7,8] in Release 10.

4.4.3 Network impacts

Support of mid-call state and calls in alerting state during SRVCC requires support in MSC Server, SCC AS and ATCF as specified in [4,7,8].

4.5 SRVCC Architecture for emergency calls

SRVCC for emergency calls is specified in [2,3,4] in 3GPP Release 9. It must be supported in any deployment supporting SRVCC where IMS emergency calls are used over IMS VoIP capable radio coverage and the latter is complemented with CS radio access. The Emergency Access Transfer Function (EATF) is a logical function required in the VPLMN in addition to the functions needed for SRVCC (see also section 4.3) and IMS emergency calls [2] see also Figure 4.5.1-1. The MSC uses the Mw interface to the (Interrogating Call Session Control Function) I-CSCF and includes the equipment identifier into the session transfer request; the equipment identified is used by the EATF to correlate the call legs. SRVCC for emergency calls does not make use of the ATCF and ATGW as described in section 4.3.

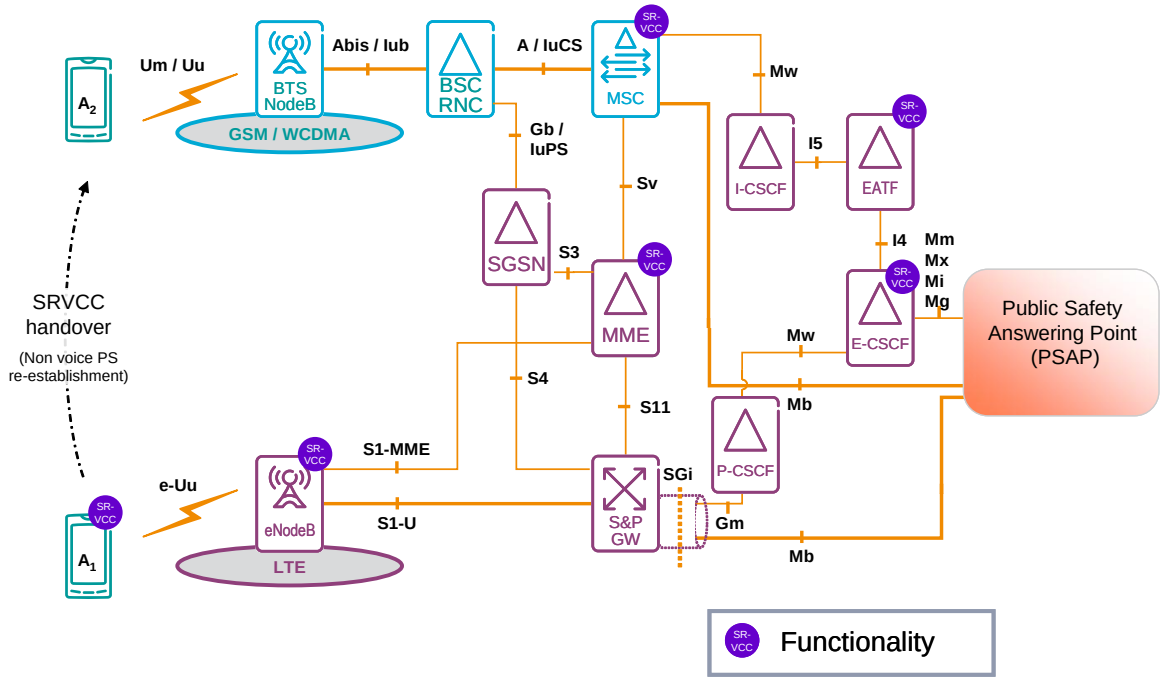

Figure 4.5.1-1: SRVCC for emergency calls Architecture

The MSC can also use the ISUP interface to an MGCF and then the Mg interface is used between the MGCF and the I-CSCF as specified in [4]. It is assumed that if ISUP is used, the ISUP extension of carrying the International Mobile Equipment Identity (IMEI) to the MGCF is supported [14,15]. The support of SRVCC for emergency calls in deployment where ISUP or SIP does not provide the equipment identifier is implementation and configuration dependent according to section 6c.3 in [4] and hence not recommended.

4.5.1 UE impacts

For UE impacts required to support SRVCC for emergency calls please see [11].

4.5.2 Network impacts

Support of SRVCC for emergency calls requires support in MME, MSC Server, E-CSCF and EATF as specified in [2,3,4,8].

4.6 Handling of non-voice media during SRVCC

In case the IMS session includes besides voice also other media, then during transfer those other media are handled as follows:

- If the target access is GERAN non Dual Transfer Mode (DTM), then all non voice media are removed from the session by the SCC AS as described in [8], clause 12.2.3.
- If the target access is UTRAN or GERAN with DTM (and the UE supports GERAN with DTM), then the UE informs the SCC AS about which non-voice media to keep on PS access as described in [8], clause 12.2.3. The case of IMS session that includes synchronised video media is described in [16].

Support of non-voice media in emergency calls is out of scope of this document.

Annex A (informative): Issues with initial deployments for Service Centralization in the IMS

A.1 General

Although service centralization in IMS as described in section 2 is expected to be fully supported at one point in time, it seems unrealistic that all operators will offer full-fledged service centralization in the IMS in their networks upon initial IMS roll-out. This is likely due to several issues which are described below.

A.2 Issue 1: Anchoring of all calls in IMS

A.2.1 Overview

All calls that are using the CS access (MO as well as MT) need to be anchored in IMS as described in section 2.1.2. This can result in the following concerns by service providers:

- Additional load on IMS core network entities; and
- Inefficient and unnecessary routing and interworking at least in the beginning of migration in the following cases:
  - For terminating calls: inefficient for CS/PSTN caller to an IMS callee camping in CS but not for
    - A CS caller to an IMS callee camping in PS and
    - An IMS caller to an IMS callee camping in CS;
  - For originating: inefficient for IMS caller camping in CS to a CS/PSTN callee or an IMS callee camping in CS but not for
    - An IMS caller camping in CS to an IMS callee camping in PS and
    - An IMS caller camping in PS to a CS/PSTN callee.

A.2.2 Guidelines to resolve issue 1

When the UE is using the CS access, the above-listed concerns can be addressed by

(A) Not routing of originating calls to the IMS;
(B) Not routing of terminating calls from the PSTN/CS domain to the IMS.

It is possible to support only (A), that is, only terminating sessions are always routed to the IMS and hence the above-listed concerns are still applicable for terminating sessions, or (A) combined with (B).

For case (A), originating calls receive only CS services and no IMS services, hence all applicable CS services must be provisioned in the HSS such that they can be executed in the MSC Server. Because [11] only mandates Ut for supplementary service configuration, the HSS needs to ensure that services settings are the same in both IMS and the CS domain if supplementary service configuration of applicable services by the user is possible. This can be done by one of the following two ways:

1. Avoiding synchronisation and accepting limitations as follows: the services Outgoing Barring Service and Originating Identification Restriction are handled in some special way. Here, the operator could have a special schema, for example not allowing user management of these two services.
3. Synchronization between the CS domain and IMS, ensuring that the service settings in IMS (over Ut) are set the same as their CS service equivalents. It is has been studied in 3GPP but no solution was standardized on how to keep IMS and CS supplementary service data settings synchronized.

For case (B), domain selection for terminating calls as specified in section 7.2.2 of [10] must be implemented in the network. In addition, the above provided considerations for service settings apply, but since communication diversion services (see also [11]) are terminating services, it is assumed that the user should be able to manage these. Hence, synchronization (case 2 above) between the CS domain and IMS for communication diversion would be needed.

Table A.2.2-1 provides an overview of which CS supplementary services are provisioned in the HSS for case (A).

Supplementary Service in IMS	CS Supplementary Services provisioned and activated in the HSS
Originating Identification Presentation	Yes
Terminating Identification Presentation	Yes
Originating Identification Restriction	1) If user is not allowed to manage service then, Yes, if also provisioned and activated in the IMS 2) If user is allowed to manage service then, provisioning state and activation state synchronized with the IMS state
Terminating Identification Restriction	No
Communication Forwarding Unconditional	No
Communication Forwarding on not Logged in	Not applicable
Communication Forwarding on Busy	No
Communication Forwarding on not Reachable	No
Communication Forwarding on No Reply	No
Barring of All Incoming Calls	No
Barring of All Outgoing Calls	1) If user is not allowed to manage service then, Yes, if also provisioned and activated in the IMS 2) If user is allowed to manage service then, provisioning state and activation state synchronized with the IMS states
Barring of Outgoing International Calls	1) If user is not allowed to manage service then, Yes, if also provisioned and activated in the IMS

Supplementary Service in IMS	CS Supplementary Services provisioned and activated in the HSS
	2) If user is allowed to manage service then, provisioning state and activation state synchronized with the IMS states
Barring of Outgoing International Calls – ex Home Country	1) If user is not allowed to manage service then, Yes, if also provisioned and activated in the IMS 2) If user is allowed to manage service then, provisioning state and activation state synchronized with the IMS states
Barring of Incoming Calls – when roaming	No
Communication Hold	Yes, if also provisioned and activated in the IMS or Hold is used without announcements
Message Waiting Indication	Not applicable
Communication Waiting	Yes. See Note 3 in section 2.2.
Ad-Hoc Multi Party Conference	Yes, if also provisioned in the IMS

A.2.2-1: CS Supplementary services in the HSS when only originating calls are not anchored in IMS, but terminating calls are anchored in IMS (case A)

Table A.2.2-2 provides an overview of which CS supplementary services are provisioned in the HSS for the case (A)+(B).

As a deployment option, the operator can select (A)+(B) only for roaming users: the originating and terminating calls can be anchored in IMS when the user is not roaming, and the originating and terminating calls need not be anchored in IMS when the user is roaming. When the user is not roaming and in the case without (A) and without (B), the CS profile in the HSS provided to the home MSC Server must comply with section 2.2. When the user is roaming and for the case (A)+(B), the CS profile in the HSS that is provided to the visited network MSC Server must comply with table A.2.2-2.

NOTE: A solution to provide different CS profiles to MSC Server in HPMN and VPMN is not standardized in 3GPP. As mentioned above, no solution on how to keep IMS and CS supplementary service data settings synchronized has been standardised.

Supplementary Service in IMS	CS Supplementary Services provisioned and activated in the HSS
Originating Identification Presentation	Provisioning state and activation state synchronized with the IMS states
Terminating Identification Presentation	Provisioning state and activation state synchronized with the IMS states.
Originating Identification Restriction	Yes if provisioned in the IMS, for temporary mode also if generally available in IMS. If user is able to manage the default temporary

Supplementary Service in IMS	CS Supplementary Services provisioned and activated in the HSS
	mode the presentation state needs to be synchronized with the IMS presentation state.
Terminating Identification Restriction	Provisioning state and activation state synchronized with the IMS states.
Communication Forwarding Unconditional	Provisioning state, activation state and service data synchronized with the IMS states and data
Communication Forwarding on not Logged in	Not applicable
Communication Forwarding on Busy	Provisioning state, activation state and service data synchronized with the IMS states and data
Communication Forwarding on not Reachable	Provisioning state, activation state and service data synchronized with the IMS states and data
Communication Forwarding on No Reply	Provisioning state, activation state and service data synchronized with the IMS states and data
Barring of All Incoming Calls	Provisioning state and activation state synchronized with the IMS states
Barring of All Outgoing Calls	Provisioning state and activation state synchronized with the IMS states
Barring of Outgoing International Calls	Provisioning state and activation state synchronized with the IMS states
Barring of Outgoing International Calls – ex Home Country	Provisioning state and activation state synchronized with the IMS states
Barring of Incoming Calls	Provisioning state and activation state synchronized with the IMS states
Communication Hold	Yes, if also provisioned and activated in the IMS or Hold is used without announcements
Message Waiting Indication	Not applicable
Communication Waiting	Yes. See Note 3 in section 2.2.
Ad-Hoc Multi Party Conference	Yes, if also provisioned and activated in the IMS

A.2.2-2: CS Supplementary services in the HSS when calls are not anchored in IMS for the case (A)+(B)

A.3 Issue 2: Support for MSC Server enhanced for ICS

A.3.1 Overview

To support MSC Server enhanced for ICS at initial deployment, it is necessary to simultaneously update all MSC Servers in the operator network.

A.3.2 AGuidelines to resolve issue 2

If support of MSC Server enhanced for ICS is not possible, then the solution described in section 2.1.2 for such deployment applies. In case of Issue 1, then section A.2.2 applies.

A.4 Issue 3: Use of CAMEL home routeing during roaming scenario

A.4.1 Overview

In roaming scenarios, and in deployment scenarios not using the MSC Server enhanced for ICS, then CAMEL home routing needs to be deployed. The use of CAMEL home routing has the following issues:

- The operator may not have signed CAMEL roaming agreements with all other operators worldwide; and
- Inefficient routeing of originated calls from the VPLMN to the HPLMN can occur if the B party is not a subscriber of the same HPLMN (see also Issue 1).

NOTE: See also section 2.1.2 for deployment scenarios where ISUP does not provide original called number and calling party number.

A.4.2 Guidelines to resolve issue 3

Same as in Issue 1 for not routing of originated calls to the IMS when using the CS access.

A.5 Issue 4: Deployment of SCC AS

A.5.1 Overview

To support Service Centralization in the IMS and SRVCC at initial deployment, SCC AS is required to be deployed and the T-ADS function as described in section 3 is required to be fully configured for each subscriber’s policy.

NOTE: Different subscribes can have different T-ADS policies, but it is also possible to have the same policy for many or even all subscribers.

A.5.2 Guidelines to resolve issue 4

If a SCC AS is not deployed, then SRVCC is not possible. In addition the T-ADS function allows querying whether the current used PS access is voice capable, so without T-ADS a voice call may fail if voice is not supported on the currently used PS access. For domain selection, the solution for calls directed to the IMS or CS that is (very briefly) described in section 7.2 in [10] would have to be implemented in the network and configured for each subscriber’s preferences. This solution enables that calls are either directed to CS or to IMS. In principle it solves the same problem as T-ADS, without the need to deploy an SCC AS, but impacting other nodes and not having the information on ongoing calls.

NOTE: T-ADS selects always the access on which a call is ongoing and has information on whether a call has been transferred from PS to CS domain during SRVCC.

Any resolution of conflicts that may arise when combining the solution as described in section 7.2 in [10] with T-ADS are not described in 3GPP and hence it is not recommended to apply both functionalities to a subscriber.

Annex B Document Management

B.1 Document History

Version	Date	Brief Description of Change	Approval Authority	Editor / Company
0.1	26/05/11	New PRD (RILTE Doc 17_011r1).	RILTE #17	Ralf Keller, Ericsson
0.2	08/06/11	Additional input. Reviewed by Jose Antonio Aranda and Donna Mackay (RiLTE Doc 18_008)	RILTE #18	Ralf Keller, Ericsson
0.3	27/06/11	Removal of SRVCC Rel 9 architecture	RILTE #18	Ralf Keller, Ericsson
0.9	08/07/11	Included proposal for change made at RILTE#18 and IREG Email approval	RILTE #18	Ralf Keller, Ericsson
0.9	03 October 2011	Submitted to DAG & EMC for approval final approval date 24 October 2011	EMC	Ralf Keller, Ericsson
1.0	18 October 2011	Removal of coversheet after approval	DAG #86 EMC #97	Ralf Keller, Ericsson
2.0	22/11/11	Change of IR.64 into a non-confidential PRD Submitted to DAG & EMC for approval, final approval date 28 December 2011	EMC	Ralf Keller, Ericsson
3.0	12/04/12	Inclusion of the following CRs: • MCR 003: SRVCC from HSPA • MCR 004: eSRVCC for Interconnect Scenario • MCR 005: Handling of non-voice media during SRVCC • mCR 006: Correction to diagram - Minor CR	IREG #62, DAG #92, PSMC # 102	Ralf Keller, Ericsson
4.0	04/07/12	Inclusion of the following CRs: • MCR 007: Co-location of SCP and SCC AS	IREG #62, DAG #94, PSMC #104	Ralf Keller, Ericsson
5.0	21/11/12	Inclusion of the following CRs • MCR008: Support of home-local and geo-local in the MSC Server • MCR009: Update of references • MCR010: Informative annex for Issues with Initial ICS Deployment	IREG #63, DAG #99, PSMC #	Ralf Keller, Ericsson
6.0	12/02/2013	Inclusion of the following CR: • MCR1001: Update of Informative Annex on Issues with Initial Deployments of Service Centralization in the IMS	IREG #63, DAG #101, PSMC #1092	Ralf Keller, Ericsson
6.1	06/03/2013	Inclusion of the following CR: • mCR1002: Correction of figure	RILTE #30	Ralf Keller, Ericsson

7.0	25/04/2013	Inclusion of the following CRs: • MCR1003: Removal of SRVCC from HSPA to 3G • MCR1004: Alignment with 3GPP regarding I2 and Mw	RILTE #29, DAG #104, PSMC #112	Ralf Keller, Ericsson
8.0	29/10/2013	Inclusion of the following CR: • MCR1005: New section on service data	RILTE #32	Ralf Keller, Ericsson
9.0	09/09/2014	Inclusion of the following CR: • MCR1007: Call waiting always on • MCR1008: Provisioning CS supplementary services in HSS • MCR1009: T-ADS and existing IMS voice session • mCR1010: Scope Update • MCR1011 Correct HOLD statement • MCR1012 Service Table in the Annex	IREG#66 RILTE#39	Ralf Keller, Ericsson
10.0	10/11/2014	Inclusion of the following CR: • MCR1013 OIR and CLIT interworking	RILTE#40 IREG#67	Ralf Keller, Ericsson

B.2 Other Information

Type	Description
Document Owner	IREG RILTE
Editor / Company	Ralf Keller, Ericsson

It is our intention to provide a quality product for your use. If you find any errors or omissions, please contact us with your comments. You may notify us at prd@gsma.com

Your comments or suggestions & questions are always welcome.