

DNS and ENUM Guidelines for Service Providers and GRX and IPX Providers

Version 12.0

01 February 2016

This is a Non-binding Permanent Reference Document of the GSMA

Security Classification: Non-confidential

Access to and distribution of this document is restricted to the persons permitted by the security classification. This document is confidential to the Association and is subject to copyright protection. This document is to be used only for the purposes for which it has been supplied and information contained in it must not be disclosed or in any other way made available, in whole or in part, to persons other than those permitted under the security classification without the prior written approval of the Association.

Copyright Notice

Copyright © 2016 GSM Association

Disclaimer

The GSM Association ("Association") makes no representation, warranty or undertaking (express or implied) with respect to and does not accept any responsibility for, and hereby disclaims liability for the accuracy or completeness or timeliness of the information contained in this document. The information contained in this document may be subject to change without prior notice.

Antitrust Notice

The information contain herein is in full compliance with the GSM Association's antitrust compliance policy.

Table of Contents

1 Introduction 6
1.1 Overview 6
1.2 Scope 6
1.3 Definition of Acronyms and Abbreviations 6
1.4 Definition of Terms 7
1.5 Document Cross-References 8
2 DNS As Used on the GRX/IPX 11
2.1 Introduction 11
2.2 Architecture 11
2.3 Domains 17
2.3.1 Introduction 17
2.3.2 General 17
2.3.3 Domain names used on the GRX/IPX DNS 17
2.3.4 Domain names used on the Internet DNS (and owned by GSMA) 26
2.3.5 Domain names used on the GRX/IPX DNS for UNI 32
2.4 Non-service specific hostnames and domains 32
2.5 Host names for the evolved packet Core (EPC) 33
2.6 Host names for the IP Multimedia Subsystem (IMS) 33
3 General DNS Configuration for Service Providers 33
3.1 Introduction 33
3.2 DNS Server Hardware 33
3.3 DNS Server Software 34
3.4 DNS Server naming 34
3.5 Domain Caching 34
3.6 Reverse Mapping 35
3.7 Use of DNS Interrogation Modes 35
3.8 Use of the GRX/IPX Root DNS Server 36
3.9 Provisioning of Service Provider's DNS servers 36
3.10 Resource Records 37
3.11 Support for IPv4 and IPv6 37
4 DNS Aspects for Standardised Services 37
4.1 Introduction 37
4.2 General Packet Radio Service (GPRS) 37
4.2.1 Introduction 37
4.2.2 APN resolution in PDP Context activation 38
4.2.3 Inter-SGSN handovers for active PDP Contexts 39
4.3 Multi-media Messaging Service (MMS) 41
4.3.1 Introduction 41
4.3.2 MM delivery based on MSISDN for the Direct Interconnect model 41
4.3.3 MM delivery based on MSISDN for the Indirect Interconnect model 43
4.3.4 MM delivery based on NAI/e-mail address 44
4.4 WLAN Inter-working 44

4.4.1 Introduction 44
4.5 IP Multi-media core network Sub-system (IMS) 45
4.5.1 Introduction 45
4.5.2 SIP server configuration 46
4.5.3 Domain Names used 48
4.6 Generic Authentication Architecture (GAA) 48
4.6.1 Introduction 48
4.7 Generic Access Network (GAN) 48
4.7.1 Introduction 48
4.8 Secure User Plane Location (SUPL) 49
4.8.1 Introduction 49
4.9 Enhanced Packet Core (EPC) 49
4.9.1 Introduction 49
4.10 IMS Centralised Services (ICS) 49
4.10.1 Introduction 49
4.11 Access Network Discovery Support Function (ANDSF) 49
4.11.1 Introduction 49
4.12 Mobile Broadcast Services (BCAST) 49
4.12.1 Introduction 49
4.13 The XCAP Root URI on Ut Interface for MMTEL/IMS profile for Voice and SMS (XCAP) 50
4.13.1 Introduction 50
4.14 RCS - Rich Communication Suite 50
4.14.1 4.14.1 Introduction 50
4.15 Evolved Packet Data Gateway (ePDG) 50
4.15.1 Introduction 50
4.16 Network element self-configuration 51
4.16.1 Introduction 51
4.17 EPC and GPRS coexistence 51
4.17.1 Introduction 51
4.18 MBMS Service Announcement Bootstrapping 51
4.18.1 Introduction 51
5 E.164 Number Translation 51
5.1 Introduction 51
5.2 General Requirements 52
5.3 Architecture 53
5.3.1 Introduction 53
5.3.2 Data Delegation Structure 53
5.3.3 Resolution procedure 56
5.3.4 Access to ENUM servers and Interconnection policy 58
5.3.5 Number Portability considerations 58
5.4 Technical Requirements 59
5.4.1 Introduction 59
5.4.2 ENUM Query 59

5.4.3 ENUM Response 60
6 Processes and Procedures relating to DNS 64
6.1 Introduction 64
6.2 Existing domains/sub-domains on the GRX/IPX network and their Allocation 64
6.3 Procedures relating to new domain names on the GRX/IPX network 64
6.4 Description of the Master Root DNS service and modality of access 65
6.4.1 Master Root DNS services 65
6.4.2 How to access Master Root DNS services 65
6.5 Delegation of sub-domains of “pub.3gppnetwork.org” 66
Annex A Sample BIND DNS Configuration for GPRS 68
A.1 Introduction 68
A.2 The "named.conf" file 68
A.2.1 The "named.conf" file for a PLMN Master Nameserver 68
A.2.2 The "named.conf" file for a PLMN Slave Nameserver 69
A.3 Zone Configuration Files 69
A.3.1 The "gprs.hint" file 69
A.3.2 The "0.0.127.in-addr.arpa" file 70
A.3.3 PLMN zone files 70
A.3.4 The "hosts" file 70
A.3.5 The "168.192.in-addr.arpa" file 72
Annex B Alternative ENUM Architecture: Multiple Root Model 73
B.1 Introduction 73
B.2 Architecture 73
B.3 Resolution 75
B.4 Access to ENUM Servers 77
B.5 Interworking with the preferred model 77
Annex C Solving Number Portability in ENUM 78
C.1 Introduction 78
C.2 Options based on number portability knowledge at a central ENUM server 78
C.2.1 Option 1 – Central authoritative database 78
C.2.2 Option 2 – Central redirection database 79
C.3 Options based on number portability knowledge at Service Provider Tier-2 ENUM server 81
C.3.1 Option 3 – Change of domain name in URIs/URLs in Tier-2 81
C.3.2 Option 4 – Redirection at Tier-2 83
C.3.3 Option 5 – Redirection at Tier-2 based on interaction with Legacy NP systems 85
C.3.4 Option 6 – Non-Authoritative response based on Legacy NP system interaction 87
C.3.5 Considerations when not all Servicer provider have a Tier-2 ENUM DNS server 89
Annex D Forms for transfer of sub-domain of “pub.3gppnetwork.org” 90
D.1 Request form 90

D.2 Letter of Authorization Template 92
Document Management **95**
Document History 95
Other Information 100

1 Introduction

1.1 Overview

Inter Service Provider IP communications are starting to evolve to support services other than GPRS Roaming. Many, if not all, of these services rely upon DNS. Therefore, it is of utmost importance for the interworking and stability of such services that Service Providers have all the necessary information to hand to ease configuration of their DNS servers upon which such services rely.

This document is intended to provide guidelines and technical information for those who need to set up and/or maintain DNS servers for inter Service Provider services. This document is not intended to provide a general education on DNS or ENUM. Thus, a reasonable level of technical competence in DNS, ENUM and DNS/ENUM server configuration is assumed throughout this document.

1.2 Scope

This GSMA official document provides recommendations on DNS (including ENUM) to facilitate successful interworking of inter-Service Provider services. In particular, guidelines for general and service specific configuration of DNS/ENUM servers, GSMA processes and procedures relating to formats and usage of domain names and sub-domain names, updates to the GRX/IPX Root DNS Server and guidelines and recommendations on GSMA Carrier ENUM.

Particular attention is given to DNS/ENUM servers connected to the private, inter-Service Provider backbone network known as the "GRX" or "IPX", as described in GSMA PRD IR.34 [12].

Out of the scope of this document are vendor specific implementation/architecture options and configuration of DNS/ENUM servers used on the Internet (e.g. those DNS servers attached to the Internet for web site hosting). The only exception to this is the guidelines for sub domains used for any standardised services that specifically use the Internet i.e. those that use the "pub.3gppnetwork.org" domain name.

1.3 Definition of Acronyms and Abbreviations

Acronym / Abbreviation	Description
CC	Country Code
CNAME	Cannonical Name [record]
DNS	Domain Name System
ENUM	E.164 Number Mapping
ESP	ENUM Service Provider
FQDN	Fully Qualified Domain Name
GPRS	General Packet Radio Service
GTP	GPRS Tunnelling Protocol

Acronym / Abbreviation	Description
IMS	IP Multimedia Sub-system
LAN	Local Area Network
MCC	Mobile Country Code
MMS	Multimedia Messaging Service
MNC	Mobile Network Code
MNO	Mobile Network Operator
MNP	Mobile Number Portability
NAI	Network Access Identifier
NDC	National Destination Code
NNI	Network-Network Interface
NP	Number Portability
RCS/RCS-e	Rich Communication Suite/ - enhanced
SN	Subscriber Number
SSL	Secure Socket Layer
UNI	User-Network Interface
VoLTE	Voice over LTE
WLAN	Wireless LAN
XCAP	XML Configuration Access Protocol

1.4 Definition of Terms

Term	Description
Delegation	When a part of a zone is maintained separately, it is delegated to a new nameserver that will have authority of that part of the domain namespace. The original zone will have the nameserver (NS) record for the delegated domain and the new sub-zone will have a new Start Of Authority (SOA) record.
DNS Client	See "DNS Resolver".
Domain Name	A Domain Name consists of two or more labels separated with a dot (‘.’) character. It starts from the least significant domain on the left, and ends with the most significant domain (or top-level domain) on the right. This naming convention naturally defines a hierarchy.
DNS Resolver	Also known as a "DNS Client", this is an entity that is attempting to resolve a given domain name to an address or vice versa. Usually the DNS Resolver is connected to a local DNS caching server that performs the DNS look-ups on behalf of the DNS Resolver. Application programs use function calls, such as ‘gethostbyname’, to find the IP address representing a domain name. The name may be specified either as a Fully Qualified Domain Name (FQDN) or only partially. In the latter case, the DNS Resolver appends (a) configured local domain name(s) at the end of the name.

Term	Description
DNS Server	A DNS Server can be a Nameserver, a Local Caching DNS Server or both. It is common that all DNS Servers cache results from queries for a specific amount of time.
GRX/IPX	GPRS roaming eXchange/IP Packet eXchange. The GRX/IPX is an inter-operator IP backbone network that is transparent to subscribers. It is used for back-end routing/tunnelling purposes only.
Nameserver	Takes care of DNS Queries sent by DNS Resolvers. The query is answered by using locally stored information (either configured locally or cached from a previous query result), by requesting the information from another DNS Server, or by providing the DNS Resolver with the details of another DNS Server to query. One Nameserver can serve (i.e. be authoritative for) several domains. There may also be several Nameservers serving one domain (usually one is the Primary, and the other/rest are Secondaries).
Zone	DNS is a distributed database that contains information of each domain name. Each DNS server maintains a part of the database called a zone. Usually a zone contains information of one domain. However, one zone may contain information about many (sub) domains. Each information element is stored in a record that contains at least a domain name and type (which includes type specific information).

1.5 Document Cross-References

Ref	Document Number	Title
1	IETF RFC 1034	"Domain Names - Concepts and Facilities"
2	IETF RFC 1035	"Domain Names - Implementation and Specification"
3	IETF RFC 3761	"The E.164 to Uniform Resource Identifiers (URI); Dynamic Delegation Discovery System (DDDS) Application (ENUM)"
4	IETF RFC 3401	"Dynamic Delegation Discovery System (DDDS) Part One: The Comprehensive DDDS"
5	IETF RFC 3402	"Dynamic Delegation Discovery System (DDDS) Part Two: The Algorithm"
6	IETF RFC 3403	"Dynamic Delegation Discovery System (DDDS) Part Three: The Domain Name System (DNS) Database"
7	IETF RFC 3404	"Dynamic Delegation Discovery System (DDDS) Part Four: The Uniform Resource Identifiers (URI)"
8	3GPP TS 23.003	"Numbering, addressing and identification", Version 8.0.0 or higher
9	GSMA PRD IR.52	"MMS Interworking Guidelines"
10	GSMA PRD IR.61	"WLAN Roaming Guidelines"
11	GSMA PRD IR.65	"IMS Roaming and Interworking Guidelines"
12	GSMA PRD IR.34	"Inter-Service Provider IP Backbone Guidelines"
13	IETF RFC 2821	"Simple Mail Transfer Protocol"

Ref	Document Number	Title
14	IETF RFC 2822	"Internet Message Format"
15	3GPP TS 23.140	"Multimedia Messaging Service (MMS); Functional description; Stage 2", version 6.7.0 or higher
16	IETF RFC 2915	"The Naming Authority Pointer (NAPTR) DNS Resource Record"
17	IETF RFC 3263	"Session Initiation Protocol (SIP): Locating SIP Servers"
18	IETF RFC 2782	"A DNS RR for specifying the location of services (DNS SRV)"
19	3GPP TS 33.220	"Generic Authentication Architecture (GAA); Generic bootstrapping architecture", version 6.9.0 or higher
20	3GPP TS 43.318	"Generic Access to the A/Gb interface; Stage 2", version 6.6.0 or higher
21	3GPP TS 44.318	"Generic Access (GA) to the A/Gb interface; Mobile GA interface layer 3 specification", version 6.5.0 or higher
22	3GPP TS 23.236	"Intra Domain Connection of RAN Nodes to Multiple CN Nodes", version 6.3.0 or higher
23	3GPP TS 23.060	"General Packet Radio Service (GPRS); Service description; Stage 2", version 6.14.0 or higher
24	IETF RFC 3824	"Using E.164 numbers with the Session Initiation Protocol (SIP)"
25	IETF RFC 1032	"Domain administrators guide"
26	3GPP TS 29.060	"General Packet Radio Service (GPRS); GPRS Tunnelling Protocol (GTP) across the Gn and Gp interface"
27	OMA OMA-AD-SUPL-V1_0-20070615-A	"Secure User Plane Location Architecture; Approved Version 1.0 – 15 June 2007"
28	3GPP TS 23.401	"General Packet Radio Service (GPRS) enhancements for Evolved Universal Terrestrial Radio Access Network (E-UTRAN) access"
29	3GPP TS 23.402	"Architecture enhancements for non-3GPP accesses"
30	3GPP TS 23.292	"IP Multimedia System (IMS) centralized services; Stage 2"
31	GSMA PRD IN.12	"ENUM White Paper"
32	http://www.iana.org/assignments/enum-services	"ENUMservice Registrations"
33	IETF RFC 3764	"Enumservice registration for Session Initiation Protocol (SIP) Addresses-of-Record"
34	IETF RFC 4355	"IANA Registration for Enumservices email, fax, mms, ems, and sms"
35	3GPP TS 24.229	"IP Multimedia Call Control Protocol based on Session Initiation Protocol (SIP) and Session Description Protocol (SDP); Stage 3", version 7.13.0 or higher.

Ref	Document Number	Title
36	ITU-T Recommendation E.212	"The international identification plan for mobile terminals and mobile users"
37	ITU-T Recommendation E.164	"The international public telecommunication numbering plan"
38	IETF RFC 3261	"SIP: Session Initiation Protocol"
39	GSMA PRD IR.33	"GPRS Roaming Guidelines"
40	OMA OMA-TS-BCAST_Service_Guide-V1_1-20100111-D	"Service Guide for Mobile Broadcast Services"
41	ITU-T E.xxx	TBC
42	GSMA PRD IR.40	"Guidelines for IP Addressing and AS Numbering for GRX/IPX Network Infrastructure and User Terminals"
43	IETF RFC 4769	"IANA Registration for an Enumservice Containing Public Switched Telephone Network (PSTN) Signalling Information"
44	IETF RFC 4825	"The Extensible Markup Language (XML) Configuration Access Protocol (XCAP)"
45	3GPP TS24.623	"Extensible Markup Language (XML) Configuration Access Protocol (XCAP over the Ut interface for Manipulating Supplementary Services)"
46	GSMA PRD IR.92	"IMS Profile for Voice and SMS"
47	RCS Release Docs	RCS 1-4 Release Documents http://www.gsmworld.com/our-work/mobile_lifestyle/rcs/rcs_release_docs.htm
48	[RCS 1.2.2]	RCS-e – Advanced Communications: Server and Client Specification Version 1.2.2 http://www.gsma.com/rcs/wp-content/uploads/2012/03/rcs-e_advanced_comms_specification_v1_2_2_approved.pdf
49	GSMA PRD IR.21	GSM Association Roaming Database, Structure and Updating Procedures
50	3GPP TS 32.501	Telecommunication management; Self-configuration of network elements; Concepts and requirements
51	3GPP TS 36.300	Evolved Universal Terrestrial Radio Access (E-UTRA) and Evolved Universal Terrestrial Radio Access Network (E-UTRAN); Overall description; Stage 2
52	GSMA PRD IR.88	LTE and EPC Roaming Guidelines
53	3GPP TS 26.346	Multimedia Broadcast/Multicast Service (MBMS); Protocols and codecs

2 DNS As Used on the GRX/IPX

2.1 Introduction

The Domain Name System is critical to such services as GPRS roaming, inter-PLMN MMS delivery and IMS inter-working. DNS is defined in many IETF RFC documents; the most notable ones are IETF RFC 1034 [1] and IETF RFC 1035 [2].

2.2 Architecture

The DNS on the inter-PLMN IP backbone network (known as the "GRX/IPX") is completely separate from the DNS on the Internet. This is purposely done to add an extra layer of security to the GRX/IPX network, and the nodes within it. The GRX/IPX Root DNS Servers that network operators see are known as "Slave" Root DNS Servers and are commonly provisioned by that Service Provider's GRX/IPX Service Provider. However, these Slave Root DNS Servers can be provisioned by operators themselves if they so wish.

Each Slave Root DNS Server is synchronised with a "Master" Root DNS Server. This process of synchronisation is known as a "Zone Transfer" and ensures that the data is the same in all GRX/IPX Service Providers' and Operators' Slave Root DNS Servers. The following diagram depicts this:

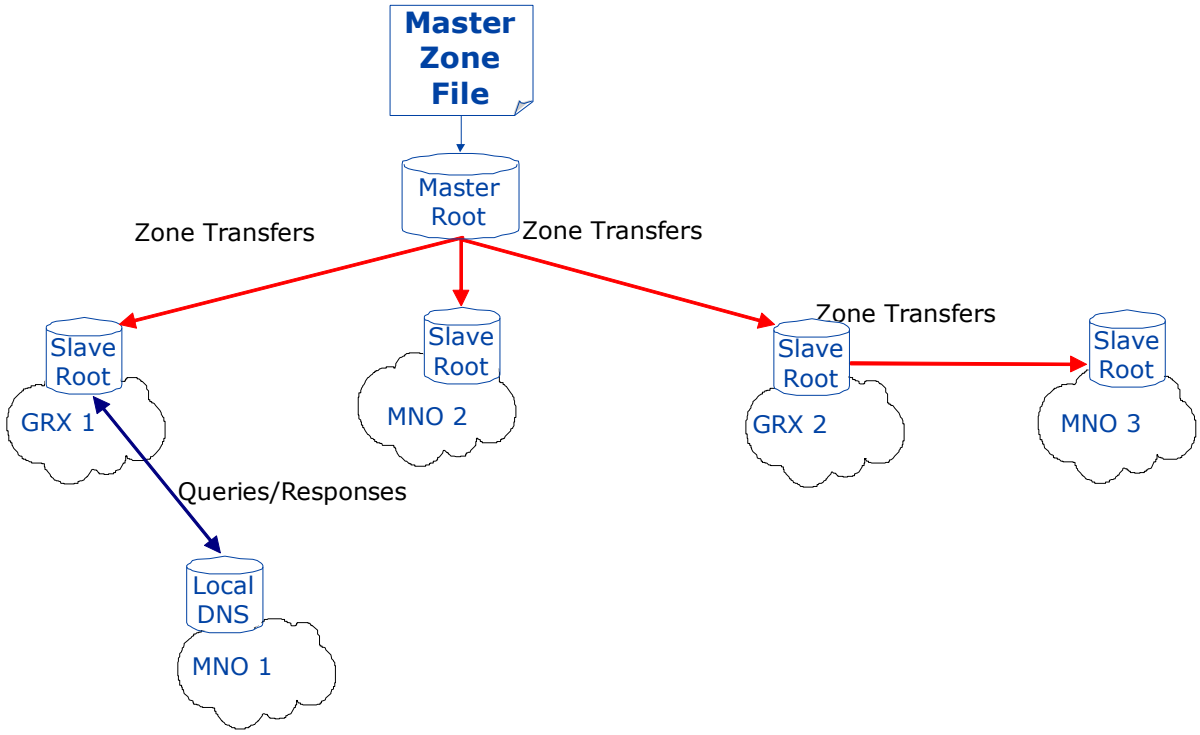

Figure 1: Backbone Architecture

The data in the Master Root DNS Server is known as the Master Zone File. The population of the data that goes into the Master Zone File has a number of sources, mainly Operators, GRX/IPX Providers and GRX/IPX Providers acting on behalf of Operators. It is also policed

and validated by the Master Root DNS Server providers (under authority from GSMA) to ensure such things as correct sub-domain allocation and usage etc. The following diagram depicts this:

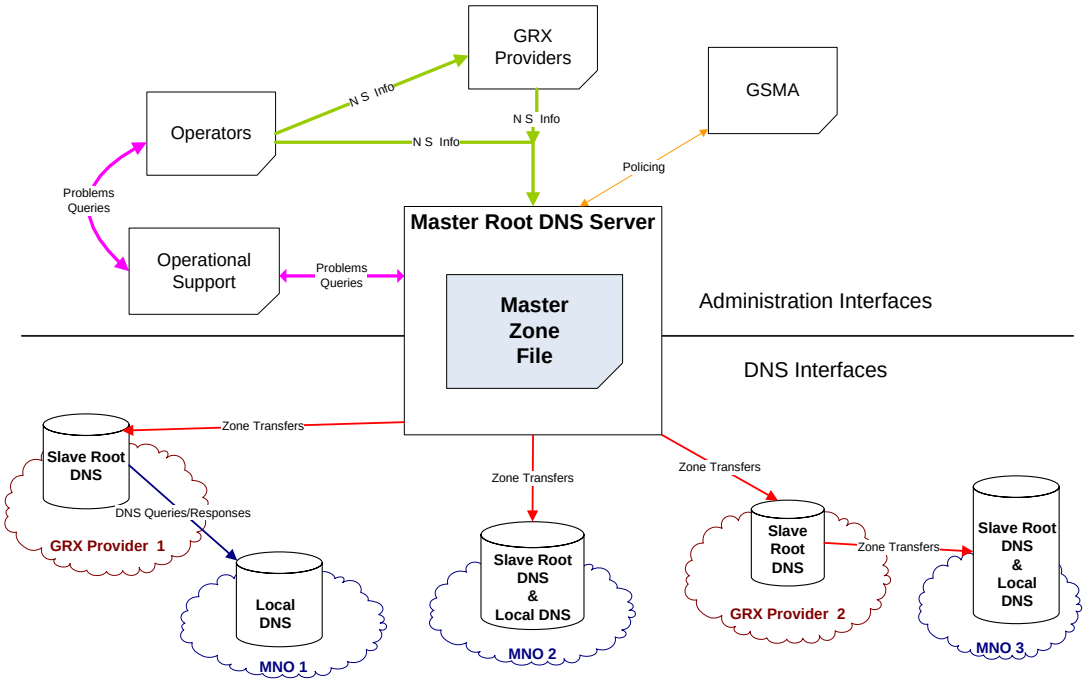

Figure 2: Overall Process Architecture

Finally, the following shows the architecture and the *typical* signalling involved in resolving hostnames to IP addresses or vice versa. The numbered steps below in the diagram correspond to the numbered message flows:

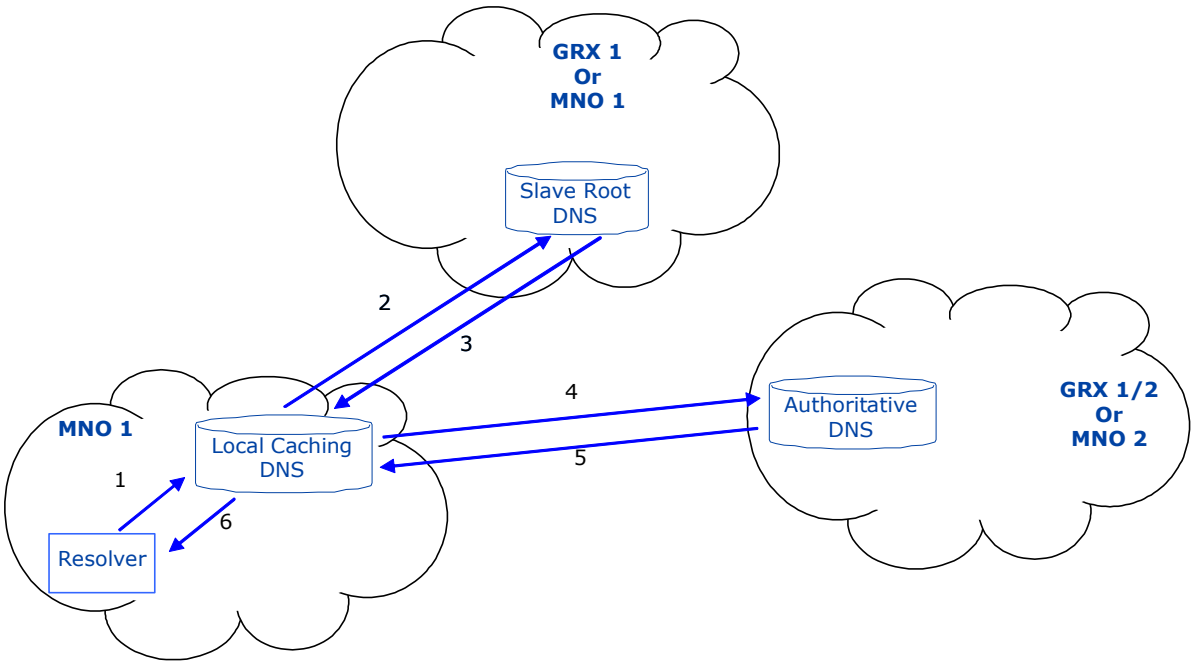

Figure 3: Resolver Architecture

1. The Resolver (for example an SGSN trying to find out the IP address of a GGSN) sends a query for the hostname (for example an APN) for which it wants the IP address, to its local caching DNS server.
2. The local caching DNS server checks to see if it has the answer to the query in its cache. If it does it answers immediately (with message 6). Otherwise, it forwards the query on to the Root DNS server. The Root DNS server may reside in Service Provider 1's network or it may reside in the GRX/IPX provider's network (GRX1). The address(es) of the Root DNS server may either be statically configured or be found by using Host Anycasting (see below).
3. The Root DNS server returns a referral to the DNS server which is authoritative for the queried domain name of the hostname (for example returns the authoritative server for "mnc015.mcc234.gprs").
4. The local caching DNS server caches the response for a specified amount of time (specified by the root DNS server) and then re sends the query but to the authoritative DNS server as specified by the Root DNS server. The authoritative DNS server may reside in the same GRX/IPX provider's network (GRX1), another GRX/IPX provider's network (GRX2) or the network of the destination Mobile Network Operator (Service Provider 2). (Indeed, it may even reside in the requesting Service Provider's network!)
5. The Authoritative DNS server responds to the query with the address of the hostname (or responds with a hostname, if a reverse lookup is being performed) to the Local Caching server in the requesting network (Service Provider 1).
6. The Local Caching Server caches the response for a specified amount of time (specified by the authoritative server) and forwards it on to the Resolver.

NOTE 1: The above shows only a typical message flow for DNS resolving on the GRX/IPX. It may take extra queries when an MNO has Multiple levels of authoritative DNS servers (see example below and section **Error! Reference source not found.**), or for such services/enablers as those that require ENUM. Please refer to section **Error! Reference source not found.** for more detailed information for each service, and section **Error! Reference source not found.** for more detailed information on ENUM.

NOTE 2: In clause 7.11.21 (Section 17) IR.21 [49] provides for MNOs to directly exchange the IP addresses and DNS names of their authoritative DNS servers. This gives the option for an MNO who has received such information from another MNO to configure directly into their local caching servers the authoritative DNS servers IP addresses for the corresponding DNS names.
When this option is used, and a query matching a configured DNS name is received, the interaction with the Root DNS server specified in steps 2-4 above is bypassed. Instead the query is sent directly to the other operators authoritative DNS server, after which steps 5 and 6 follow. However if the local caching DNS server has cached the answer to the query, the answer is sent directly as specified in step 2.

Instead of having a single Authoritative DNS, an Operator may choose to split the DNS into several levels of DNS for example a First Level DNS which may be authoritative for some of the domain names “owned” by the MNO, and one or more Second Level Authoritative DNSes, which may be authoritative for different “subdomainnames”. where for example a Second Level DNS may be outsourced to 3rd party service provider for a particular service.

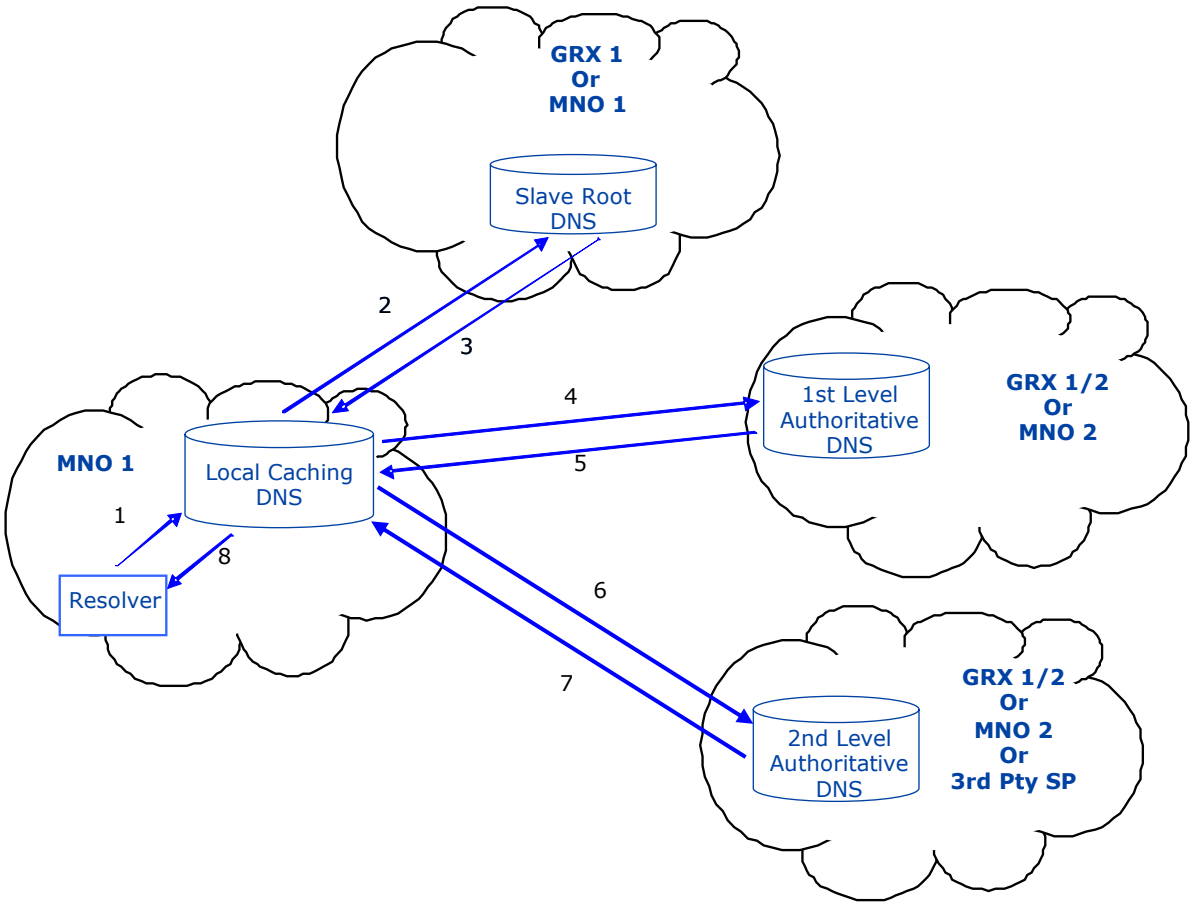

Figure 1a: Resolver Architecture with multiple levels of Authoritative DNS

1. Same as step 1 in the example above
2. Same as step 2 in the example above
3. Same as step 3 in the example above
4. Same as step 4 in the example above
5. The First Level Authoritative DNS server may be authoritative for the queried domain name, in which cases it responds to the query with the address of the hostname (or responds with a hostname, if a reverse lookup is being performed) to the Local Caching server in the requesting network (Service Provider 1). In this case the following step process continues with step 8.
   Alternatively for certain “subdomain names”, a second level DNS may be authoritative. In this case The First Level Authoritative DNS server returns a referral to the Second Level DNS server which is authoritative for the queried domain name of the hostname (for example returns the authoritative server for "<subdomainname>.mnc015.mcc234.gprs")

6. The local caching DNS server caches the response for a specified amount of time (specified by the First Level Authoritative DNS server) and then re - sends the query to the Second Level Authoritative DNS server as specified by the First Level Authoritative DNS server. The 2nd Level Authoritative DNS server may reside in the same GRX/IPX provider's network (GRX1), another GRX/IPX provider's network (GRX2), the network of the destination Mobile Network Operator (Service Provider 2), or in a 3rd Party Service Providers Network.
7. The Second Level Authoritative DNS server may respond to the query with the address of the hostname (or responds with a hostname, if a reverse lookup is being performed) to the Local Caching server in the requesting network (Service Provider 1).
8. The Local Caching Server caches the response for a specified amount of time (specified by the authoritative server) and forwards it on to the Resolver.

NOTE 3: It is recommended that no more than two Levels of Authoritative DNS (that is First Level and Second Level) are provisioned in a resolution "chain". However, an originating Service Provider for ENUM queries needs to be able to make at least as many queries as there are labels in the FQDN.

NOTE 4: In case the option to directly configure the IP address of another operators DNS server is used as discussed in NOTE 2 above, only IP addresses of First Level Authoritative DNS Server should be configured.

Some IPX services are offered on different network segments (VLANs) that are application aware and that may not provide end-to-end IP connectivity, i.e. as shown in Fig 4 below, MNO2 can either be a On-net MNO or a Off-net via IPX2. The DNS/ENUM architecture is required to take this into account. (See IR.34). A resolver architecture where the DNS service is “fronted” with a DNS cache/forwarder is required.

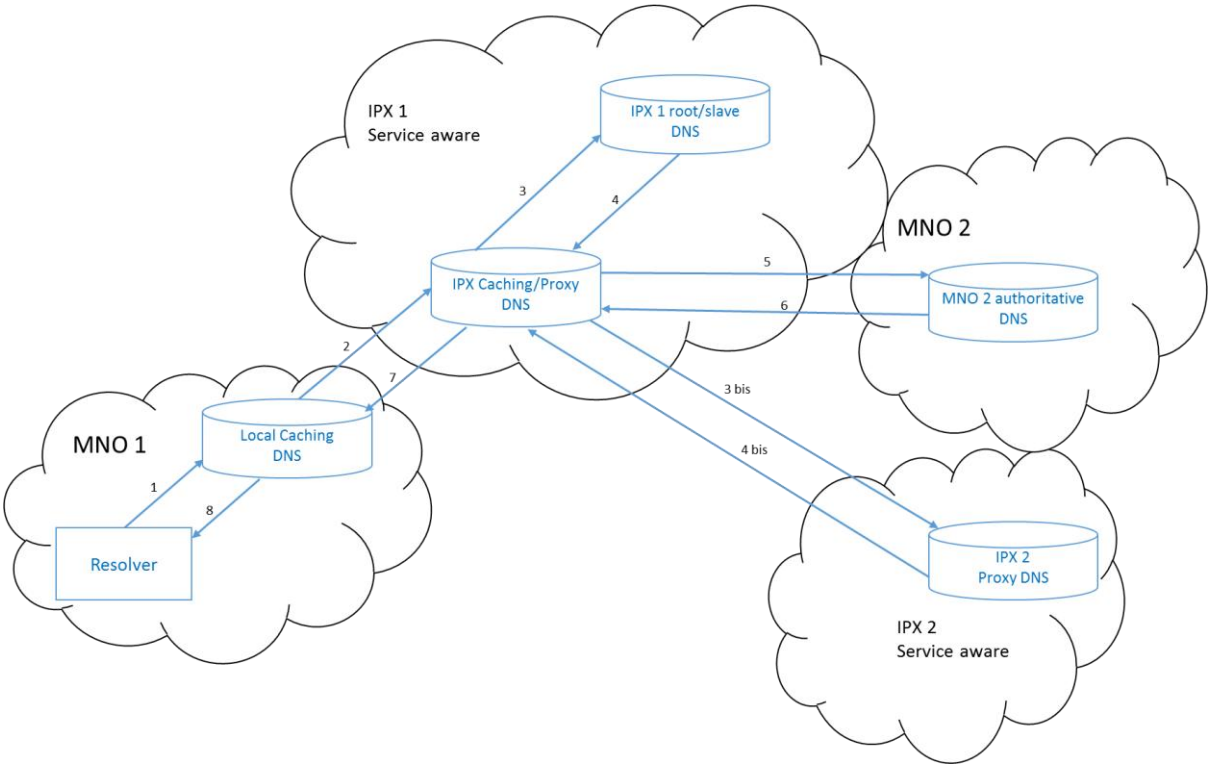

Figure 4 Service aware network resolver architecture

1. The Resolver sends a query, to its local caching DNS server for the hostname for which it wants the IP address.

2. The local caching DNS server checks to see if it has the answer to the query in its cache. If it does, it answers immediately (with message 8). Otherwise, it forwards the query on to the IPX proxy/DNS
3. Based on the requested domain, the IPX DNS/Cache, either sends the query to the root DNS (in case MNO2 is on-net) or to the next IPX provider proxy (if MNO2 is off-net) to resolve the query.
4. The root slave DNS returns the authoritative DNS for the requested domain in MNO 2 or (message 4-bis) the IPX 2 proxy returns the query response.
5. (Case of on-net only:) The IPX proxy/cache sends the query to the authoritative DNS in MNO 2 network.
6. (Case of on-net only:) The authoritative DNS in MNO 2 returns the response to the query.
7. The IPX proxy/cache returns the response to the query to the cache in MNO 1 network.
8. The response is returned from the local cache to the resolver.

2.3 Domains

2.3.1 Introduction

The following sub-sections detail the domain names that can and cannot be used on the GRX/IPX network.

In addition to this, the 3GPP have designated a specific sub domain for usage on the Internet's DNS to enable user equipment to locate a specific server on the Internet (terminals cannot see the GRX/IPX therefore a whole new sub domain had to be introduced). For more information on which domains used by 3GPP are intended for which network, see 3GPP TS 23.003 [8], Annex D.

2.3.2 General

Unlike the DNS on the Internet, the DNS on the GRX/IPX network is currently much "flatter". That is, there are not so many domains (and sub-domains of thereof), supported and provisioned in the GRX/IPX Root DNS Server. This inherently means that all domain names used by Service Providers and GRX/IPX Providers in any service that utilises the GRX/IPX network are limited to just the domain names detailed in section **Error! Reference source not found.** below. **No other domain name formats are currently supported on the GRX/IPX network!** This effectively means a limitation of domain names of ".gprs" and ".3gppnetwork.org" at the higher level, and limited beneath to sub-domains of a format based on ITU-T recommendation E.212 [36] number ranges.

For the ".gprs" domain name, so called "human friendly" sub-domains are also allowed, as specified in 3GPP TS 23.003 [8], section 9. This consists of simply an FQDN reserved in the Internet domain name space e.g. serviceprovider.fi, serviceprovider.co.uk. However, such sub-domains of ".gprs" are not generally used in the GRX/IPX network and it is recommended not to use these as they can negatively affect GPRS/3G PS roaming. See section **Error! Reference source not found.** below for more details.

More information on processes and procedures relating to domain names can be found in section **Error! Reference source not found.**.

2.3.3 Domain names used on the GRX/IPX DNS

The following provides a summary of the domain names that are used by Service Providers on private IP inter-connects and on the GRX/IPX network. These domain names are only resolvable by network equipment and not by end users. That is, they are exclusively used on the Network-Network Interface (NNI) and not on the User-Network Interface (UNI).

Additional domain names that are resolvable on the GRX/IPX network's DNS may be added in the future. See section **Error! Reference source not found.** for more details.

For more details about each domain name and/or sub-domain name, refer to the referenced documents.

Domain name	Sub-domain(s)	Explanation	Rules of Usage	Resolvability
.gprs	Service Provider domains of the form: <Network_Label>.mnc<MNC>.mcc<MCC>.gprs Where <Network Label> is the Network Label part of the Access Pont Name (APN) as defined in 3GPP TS 23.003 [8], section 9, and <MNC> and <MCC> are the MNC and MCC of the Service Provider represented in decimal (base 10) form, with any 2 digit MNC padded out to 3 digits by inserting a zero ("0") on the beginning e.g. 15 becomes 015.	Used in GPRS for the Operator ID in APNs. See section **Error! Reference source not found.** and also 3GPP TS 23.003 [8], section 9, for more information. For Support of 2G/3G and EPC coexistence, see also section 4.17	Each Service Provider is allowed to use only sub-domains consisting of MNC(s) and MCC(s) that are allocated to them by ITU-T and their local national numbering authority. Service Providers should avoid using Network Labels consisting of any of the below defined sub-domains, in order to avoid clashes.	Domain needs to be resolvable by at least all GPRS/PS roaming partners.
	rac<RAC>.lac<LAC>.mnc<MNC>.mcc<MCC>.gprs Where <RAC> and <LAC> are the Routing Area Code and Location Area Code (respectively) represented in hexadecimal (base 16) form, and <MNC> and <MCC> are the MNC and MCC of the Service Provider represented in decimal (base 10) form, with any 2 digit MNC padded out to 3 digits by inserting a zero ("0") on the beginning e.g. 15 becomes 015.	Used in inter-SGSN handovers (i.e. Routing Area Updates) by the new SGSN (possibly in a new PLMN) to route to the old SGSN (possibly in the old PLMN). See section **Error! Reference source not found.** and also 3GPP TS 23.003 [8], Annex C.1, for more information.	Each Service Provider is allowed to use only sub-domains consisting of MNC(s) and MCC(s) that are allocated to them by ITU-T and their local national numbering authority.	Domains need to be resolvable by at least all SGSNs to which a UE can hand over (which may be in other networks, if inter network GPRS/PS handovers are supported in a Service Provider's network).
	nri<NRI>.rac<RAC>.lac<LAC>.mnc<MNC>.mcc	Used in Routing Area		

Domain name	Sub-domain(s)	Explanation	Rules of Usage	Resolvability
	<MCC>.gprs Where <NRI>, <RAC> and <LAC> are the Network Resource Identifier, Routing Area Code and Location Area Code (respectively) represented in hexadecimal (base 16) form, and <MNC> and <MCC> are the MNC and MCC of the Service Provider represented in decimal (base 10) form, with any 2 digit MNC padded out to 3 digits by inserting a zero ("0") on the beginning e.g. 15 becomes 015.	Updates by the new SGSN (possibly in a new PLMN) to route to the old SGSN (possibly in the old PLMN), where Intra Domain Connection of RAN Nodes to Multiple CN Nodes (also known as "RAN flex" – see 3GPP TS 23.236 [22]) is applied. See section **Error! Reference source not found.** and also 3GPP TS 23.003 [8], Annex C.1, for more information.		
	rnc<RNC>.mnc<MNC>.mcc<MCC>.gprs Where <RNC> is the RNC ID represented in hexadecimal (base 16) form, and <MNC> and <MCC> are the MNC and MCC of the Service Provider represented in decimal (base 10) form, with any 2 digit MNC padded out to 3 digits by inserting a zero ("0") on the beginning e.g. 15 becomes 015.	Used in SRNS relocation to route to the target RNC in the new SGSN (possibly in a new PLMN). See section **Error! Reference source not found.** and also 3GPP TS 23.003 [8], Annex C.3, for more information.		
	mms.mnc<MNC>.mcc<MCC>.gprs Where <MNC> and <MCC> are the MNC and MCC	Used in MMS for the domain name part of the FQDN for MMSCs.		Domain needs to be resolvable by at least all directly

Domain name	Sub-domain(s)	Explanation	Rules of Usage	Resolvability
	of the Service Provider represented in decimal (base 10) form, with any 2 digit MNC padded out to 3 digits by inserting a zero ("0") on the beginning e.g. 15 becomes 015.	See section **Error! Reference source not found.** and also 3GPP TS 23.140 [15], section 8.4.5.1, for more information.		connected MMS interworking partners/Service Providers and directly connected MMS Hub Providers.
	`<Internet_assigned_domain_name>.gprs` Where <Internet_assigned_domain_name> is a domain name reserved by the Service Provider on the Internet. An example is "example.com.gprs"	Used as an alternative Operator ID in APNs (also known as "Human Readable APNs"). See 3GPP TS 23.003 [8], section 9, for more details.	The domain name(s) used must be owned by that Service Provider on the Internet. If the domain name(s) expire on the Internet, they also expire on the GRX/IPX. Care should be taken to ensure there is no clash with the other sub-domains for ".gprs" as defined above.	Domain needs to be resolvable by at least all GPRS/PS roaming partners.
`.3gppnetwork.org`	`ims.mnc<MNC>.mcc<MCC>.3gppnetwork.org` Where <MNC> and <MCC> are the MNC and MCC of the Service Provider represented in decimal (base 10) form, with any 2 digit MNC padded out to 3 digits by inserting a zero ("0") on the beginning e.g. 15 becomes 015.	Used in IMS in SIP addressing; specifically in the Private and Public Identities used in SIP registration. See section **Error! Reference source not found.** and 3GPP TS 23.003 [8], section 13, for more information.	Each Service Provider is allowed to use only sub domains consisting of MNC(s) and MCC(s) that are allocated to them by ITU T and their local national numbering authority.	Domain needs to be resolvable by at least all SIP/IMS based service inter working partners/Service Providers, as well as roaming partners where a visited P-CSCF is used.

Domain name	Sub-domain(s)	Explanation	Rules of Usage	Resolvability
	wlan.mnc<MNC>.mcc<MCC>.3gppnetwork.org Where <MNC> and <MCC> are the MNC and MCC of the Service Provider represented in decimal (base 10) form, with any 2 digit MNC padded out to 3 digits by inserting a zero ("0") on the beginning e.g. 15 becomes 015.	Used in WLAN inter-working for NAI realms. See section **Error! Reference source not found.** and 3GPP TS 23.003 [8], section 14, for more information.	Sub domains within the Service Provider's domain (i.e. mnc<MNC>.mcc<MCC>) are documented in 3GPP TS 23.003 [8]. It is recommended that Service Providers do not use other sub domains that are not specified in 3GPP, OMA or in this PRD as this could potentially cause a clash of sub domain usage in the future.	Since this is a realm, not a domain name, it does not necessarily have to be resolvable by external entities. The only time this is used in DNS is when Diameter is used and the next hop is determined by DNS rather than a look up table.
	gan.mnc<MNC>.mcc<MCC>.3gppnetwork.org Where <MNC> and <MCC> are the MNC and MCC of the Service Provider represented in decimal (base 10) form, with any 2 digit MNC padded out to 3 digits by inserting a zero ("0") on the beginning e.g. 15 becomes 015.	Used in the Generic Access Network for Full Authentication NAI realms and Fast Re-authentication NAI realms. See section **Error! Reference source not found.** and 3GPP TS 23.003 [8], section 17.2, for more information.		Since this is a realm, not a domain name, it does not necessarily have to be resolvable by external entities. The only time this is used in DNS is when Diameter is used and the next hop is determined by DNS rather than a look up table.
	epc.mnc<MNC>.mcc<MCC>.3gppnetwork.org Where <MNC> and <MCC> are the MNC and MCC of the Service Provider represented in decimal (base 10) form, with any 2 digit MNC padded out to 3 digits	Used in the Enhanced Packet Core (EPC) architecture (previously known as Service Architecture Evolution		Domain and sub-domains need to be resolvable by EPC/SAE roaming partners.

Domain name	Sub-domain(s)	Explanation	Rules of Usage	Resolvability
	by inserting a zero ("0") on the beginning e.g. 15 becomes 015.	– SAE) for NAIs and FQDNs of EPC related nodes. See section **Error! Reference source not found.** and 3GPP TS 23.003 [8], section 19, for more information. For support of EPC and 2G/3G coexistence see also section 4.17		
	`ics.mnc<MNC>.mcc<MCC>.3gppnetwork.org` Where <MNC> and <MCC> are the MNC and MCC of the Service Provider represented in decimal (base 10) form, with any 2 digit MNC padded out to 3 digits by inserting a zero ("0") on the beginning e.g. 15 becomes 015.	Used in the IMS Centralised Services feature in SIP addressing. See section **Error! Reference source not found.** and 3GPP TS 23.003 [8], section 20, for more information.		Domain should only be resolvable for CS roaming partners where an MSC (Server) enhanced for ICS is allowed to be used in that visited partner's network.
	`node.mnc<MNC>.mcc<MCC>.3gppnetwork.org` Where <MNC> and <MCC> are the MNC and MCC of the Service Provider represented in decimal (base 10) form, with any 2 digit MNC padded out to 3 digits by inserting a zero ("0") on the beginning e.g. 15 becomes 015.	Used by Service Providers to provide FQDNs to non-service specific nodes/hosts e.g. DNS/ENUM servers, routers, firewalls etc. See section **Error! Reference source not found.** of this	Each Service Provider is allowed to use only sub-domains consisting of MNC(s) and MCC(s) that are allocated to them by ITU-T and their local national numbering authority.	Domain needs to be resolvable by at least all roaming/interworking partners for the services used by this domain name.

Domain name	Sub-domain(s)	Explanation	Rules of Usage	Resolvability
		document for more information.		
	oam.mnc<MNC>.mcc<MCC>.3gppnetwork.org Where <MNC> and <MCC> are the MNC and MCC of the Service Provider represented in decimal (base 10) form, with any 2 digit MNC padded out to 3 digits by inserting a zero ("0") on the beginning e.g. 15 becomes 015.	Used by eNBs and possibly other network entities in network element self-configuration to discover an Operations and Maintenance (OAM) system. See section 4.16 and also 3GPP TS 23.003 [8] section 23, for more information.	Each Service Provider is allowed to use only sub-domains consisting of MNC(s) and MCC(s) that are allocated to them by ITU-T and their local national numbering authority.	Domain should only be resolvable by entities within an operator's network, or in the case of network sharing, within the shared operator's network.
	unreachable.3gppnetwork.org	Used in WLAN inter-working, specifically as a realm in the Alternative NAI. Its purpose is to enable the UE to retrieve a list of PLMNs behind a WLAN Access Point. See 3GPP TS 23.003 [8], section 14.6, for more information.	Neither a Service Provider, a GRX/IPX Provider nor any other entity should use this domain name. It is simply reserved to never be used!	Intentionally not resolvable by any entity.
.ipxsp.org	spn<SPN>.ipxsp.org Where <SPN> is the Service Provider Number (as defined in ITU-T E.xxx [41]) of the Service Provider. An example is: "spn001.ipxsp.org".	Not used in any particular service, however, can be used by any Service Provider for any service they see fit.	Each Service Provider is allowed to use only SPNs that are allocated to them by ITU-T.	Domain needs to be resolvable by at least all roaming/interworking partners for the services used by

Domain name	Sub-domain(s)	Explanation	Rules of Usage	Resolvability
	Further sub-domains under this are the responsibility of the owning Service Provider. However, it is recommended to use/reserve the sub-domains defined above for the domain "mnc<MNC>.mcc<MCC>.3gppnetwork.org".	The main intention is to provide a domain name that Service Providers without an E.212 number range allocation can use when connecting to the IPX network.		this domain name.
.e164enum.net	The sub-domains of this domain name correspond to reversed ITU-T E.164 numbers (as defined in ITU-T Recommendation E.164 [37]).	Used as the domain name for ENUM queries to the GRX/IPX Carrier ENUM as defined in section 5 of the present document.	Each Service Provider is allowed to use only sub-domains relating to their subscribers. See section 5 for more information.	See section 5 for more information.
.in-addr.arpa	The sub-domains of this domain name correspond to reversed IPv4 addresses that belong to the Service Provider.	Used for reverse lookups for IPv4 addresses i.e. mapping names to IPv4 addresses. This is useful when troubleshooting inter-PLMN connections. Due to available tools being pre-configured to use this hierarchy for reverse look-ups, it would not be feasible to use any different TLD.	Each Service Provider shall populate this domain for IP addresses assigned to them only (except with permission of the actual owner).	Domain should be resolvable by at least all interworking partners/Service Providers, roaming partners and directly connected GRX/IPX Providers.
.ip6.arpa	The sub-domains of this domain name correspond to	Used for reverse		

Domain name	Sub-domain(s)	Explanation	Rules of Usage	Resolvability
	reversed IPv6 addresses that belong to the Service Provider.	lookups for IPv6 addresses i.e. mapping names to IPv6 addresses. This is useful when troubleshooting inter-PLMN connections. Due to available tools using this hierarchy for reverse look-ups, it would not be feasible to use any different TLD.		
ipxnetwork.org	<IPXN>.ipxnetwork.org Where IPXN is the IPX provider company name or acronym. It is agreed amongst IPX/GRX providers and assigned on a first come – first served basis (see section 6.2). Further subdomains under this are the responsibility of the owning IPX provider.	Not used in any particular service, however, can be used by any IPX Provider for any service they see fit. The main intention is to provide a domain name that IPX provider can use for IPX proxies or other equipment.	One subdomain per IPX provider. An IPX provider shall not use two subdomains.	Domain needs to be resolvable by at least all roaming/ interworking partners for the services used by this domain name.

Table 1: Definitive list of domain names owned by GSMA that are used on the GRX/IPX DNS

2.3.4 Domain names used on the Internet DNS (and owned by GSMA)

The following provides a summary of the domain names owned by GSMA that are used by Service Providers on the Internet for 3GPP specific services. For more detail about each domain name and/or sub-domain name, refer to the referenced documents.

Domain name	Sub-domain(s)	Explanation	Rules of Usage	Resolvability
pub.3gppnetwork.org	gan.mnc<MNC>.mcc<MCC>.pub.3gppnetwork.org Where <MNC> and <MCC> are the MNC and MCC of the Service Provider represented in decimal (base 10) form, with any 2 digit MNC padded out to 3 digits by inserting a zero ("0") on the beginning e.g. 15 becomes 015.	Used in the Generic Access Network for home network domain names in node identifiers. See section 4.7 and 3GPP TS 23.003 [8], section 17.3, for more information.	Each Service Provider is allowed to use only sub-domains consisting of MNC(s) and MCC(s) that are allocated to them by ITU-T and their local national numbering authority. The host names "psegw" and "pganc" under this sub-domain are reserved for special use, as detailed in 3GPP TS 23.003 [8], section 17.3	Domains need to be resolvable on the Internet.
	w-apn.mnc<MNC>.mcc<MCC>.pub.3gppnetwork.org Where <MNC> and <MCC> are the MNC and MCC of the Service Provider represented in decimal (base 10) form, with any 2 digit MNC padded out to 3 digits by inserting a zero ("0") on the beginning e.g. 15 becomes 015.	Used in WLAN inter-working for PDG addressing. See section 4.4 and 3GPP TS 23.003 [8], section 14, for more information.	Each Service Provider is allowed to use only sub-domains consisting of MNC(s) and MCC(s) that are allocated to them by ITU-T. The same rules apply for APN constructs, as defined in GSMA PRD IR.34.	
	h-slp.mnc<MNC>.mcc<MCC>.pub.3gppnetwork.org Where <MNC> and <MCC> are the MNC and MCC of the Service Provider represented in	Used in the Secure User Plane Location feature for Home SUPL Location Platform addressing. See	Each Service Provider is allowed to use only sub-domains consisting of MNC(s) and MCC(s) that are allocated to them by ITU-T and their local	

Domain name	Sub-domain(s)	Explanation	Rules of Usage	Resolvability
	decimal (base 10) form, with any 2 digit MNC padded out to 3 digits by inserting a zero ("0") on the beginning e.g. 15 becomes 015.	section 4.8 and OMA-AD-SUPL-V1_0-20070615-A [27] section 7.2.2, for more information.	national numbering authority.	
	`bsf.mnc<MNC>.mcc<MCC>.pub.3gppnetwork.org` Where <MNC> and <MCC> are the MNC and MCC of the Service Provider represented in decimal (base 10) form, with any 2 digit MNC padded out to 3 digits by inserting a zero ("0") on the beginning e.g. 15 becomes 015.	Used in the Generic Authentication Architecture for BSF addressing when USIM is used in bootstrapping. See section 4.6 and 3GPP TS 23.003 [8], section 16, for more information.		
	`andsf.mnc<MNC>.mcc<MCC>.pub.3gppnetwork.org` Where <MNC> and <MCC> are the MNC and MCC of the Service Provider represented in decimal (base 10) form, with any 2 digit MNC padded out to 3 digits by inserting a zero ("0") on the beginning e.g. 15 becomes 015.	Used in EPC and WLAN inter working (3GPP Rel 8) home agent addressing. See 3GPP TS 23.003 [8], section 21, for more information.		
	`ha-apn.mnc<MNC>.mcc<MCC>.pub.3gppnetwork.org` Where <MNC> and <MCC> are the MNC and MCC of the Service Provider represented in decimal (base 10) form, with any 2 digit MNC		Each Service Provider is allowed to use only sub-domains consisting of MNC(s) and MCC(s) that are allocated to them by ITU T. The same rules apply for APN constructs,	

Domain name	Sub-domain(s)	Explanation	Rules of Usage	Resolvability
	padded out to 3 digits by inserting a zero ("0") on the beginning e.g. 15 becomes 015.		as defined in GSMA PRD IR.34 [12].	
	`bcast.mnc<MNC>.mcc<MCC>.pub.3gppnetwork.org` Where <MNC> and <MCC> are the MNC and MCC of the Service Provider represented in decimal (base 10) form, with any 2 digit MNC padded out to 3 digits by inserting a zero ("0") on the beginning e.g. 15 becomes 015.	Used in the OMA Mobile Broadcast Services (BCAST) enabler, version 1.1, for Service Guide discovery by a client with access to an IMSI. See section 4.12 and OMA-TS-BCAST_Service_Guide-V1_1-20100111-D [40] for more information.	Each Service Provider is allowed to use only sub-domains consisting of MNC(s) and MCC(s) that are allocated to them by ITU-T and their local national numbering authority.	
	`rcs.mnc<MNC>.mcc<MCC>.pub.3gppnetwork.org` Where <MNC> and <MCC> are the MNC and MCC of the Service Provider represented in decimal (base 10) form, with any two (2) digit MNC padded out to three (3) digits by inserting a zero ("0") on the beginning for example 15 becomes 015.	Used for the RCS/RCS-e service. RCS/RCS-e service may use further subdomain names depending on the RCS/RCS-e service evaluation and developments (for example config.rcs.mnc	Each Service Provider is allowed to use only sub-domains consisting of MNC(s) and MCC(s) that are allocated to them by ITU-T and their local national numbering authority.	

Domain name	Sub-domain(s)	Explanation	Rules of Usage	Resolvability
		<MNC>.mcc<MCC>.pub.3gppnetwork.org). The description and the use of the subdomain names will be referenced in the RCS/RCS-e specifications where this domain can be used by all RCS/RCS-e versions.		
	bsf.ims.mnc<MNC>.mcc<MCC>.pub.3gppnetwork.org Where <MNC> and <MCC> are the MNC and MCC of the Service Provider represented in decimal (base 10) form, with any 2 digit MNC padded out to 3 digits by inserting a zero ("0") on the beginning e.g. 15 becomes 015.	Used in the Generic Authentication Architecture for BSF addressing when ISIM is used in bootstrapping. See section 4.6 and 3GPP TS 23.003 [8], section 16, for more information.	Each Service Provider is allowed to use only sub-domains consisting of MNC(s) and MCC(s) that are allocated to them by ITU-T and their local national numbering authority.	
	xcap.ims.mnc<MNC>.mcc<MCC>.pub.3gppnetwork.org Where <MNC> and <MCC> are the MNC and MCC of the Service Provider represented in decimal (base 10) form, with any 2 digit MNC padded out to 3 digits by inserting a zero ("0") on	Used in supplementary service configuration using XCAP as specified in IR.92 [46]. Also see section 4.13	Each Service Provider is allowed to use only sub-domains consisting of MNC(s) and MCC(s) that are allocated to them by ITU-T and their local national numbering	

Domain name	Sub-domain(s)	Explanation	Rules of Usage	Resolvability
	the beginning e.g. 15 becomes 015.	and 3GPP TS 23.003 [8], section 13.9, for more information.	authority.	
	epdg.epc.mnc<MNC>.mcc<MCC>.pub.3gppnetwork.org Where <MNC> and <MCC> are the MNC and MCC of the Service Provider represented in decimal (base 10) form, with any 2 digit MNC padded out to 3 digits by inserting a zero ("0") on the beginning e.g. 15 becomes 015.	Used in inter-working untrusted non-3GPP access network to EPC. See section 4.15 and 3GPP TS 23.003 [8], section 19.4.2.9, for more information.	Each Service Provider is allowed to use only sub-domains consisting of MNC(s) and MCC(s) that are allocated to them by ITU-T and their local national numbering	
	mbmsbs.mnc<MNC>.mcc<MCC>.pub.3gppnetwork.org Where <MNC> and <MCC> are the MNC and MCC of the Service Provider represented in decimal (base 10) form, with any 2 digit MNC padded out to 3 digits by inserting a zero ("0") on the beginning e.g. 15 becomes 015.	Used by a UE for MBMS Service Announcement Bootstrap. See section 4.18 and 3GPP TS 23.003 [8], section 15.5, for more information.	Each Service Provider is allowed to use only sub-domains consisting of MNC(s) and MCC(s) that are allocated to them by ITU-T and their local national numbering	

Table 2: Definitive list of domain names owned by GSMA that are used on the Internet DNS

2.3.5 Domain names used on the GRX/IPX DNS for UNI

Only the domain name "ipxuni.3gppnetwork.org" is defined for domain names of this type (see 3GPP TS 23.003 [8]). However, there are currently no sub-domains reserved under this domain name.

2.4 Non-service specific hostnames and domains

Having a consistent naming convention makes it easier for tracing and trouble-shooting as well as easing the maintenance of Service Provider's DNS. The following convention is recommended to achieve these goals. Although the usage of this naming methodology is highly recommended, it is not mandated.

Service Provider nodes should have names for each interface with the following format:

<city>-<type>-<nbr>

where:

- <city> is the name, or shortened name, of the city/town (or closest, where applicable) where the node is located
- <nbr> is a running number of similar devices at the same city (for DNS servers, use 0 to indicate the primary DNS Server)
- <type> describes device type and should be one of the following for GRX/IPX connected hosts:
  - dns - DNS/ENUM servers
  - ggsn
  - sgsn
  - rtr - router
  - fw - firewall

Additional values for the <type> parameter are for further study for the GRX/IPX. For example, the following are valid hostnames for interfaces on Service Provider nodes:

- helsinki-ggsn-4

The domain name to append to hostnames for nodes belonging to Service Providers should be the following (see section **Error! Reference source not found.** for more details on the domain name formats):

- node.mnc<MNC>.mcc<MCC>.3gppnetwork.org
- node.spn< SPN>.ipxsp.org

A combination of the above domain names could be used by a Service Provider; however, for consistency it is better to use only one.

The following are thus example Fully Qualified Domain Names (FQDNs) for interfaces on Service Provider nodes:

- helsinki-ggsn-4.node.mnc015.mcc234.3gppnetwork.org

- london-dns-23.node.spn001.ipxsp.org

Note that usage of the hostnames and sub-domains specified within this section under "mnc<MNC>.mcc<MCC>.gprs" is now deprecated, and Service Providers are recommended to use either of "mnc<MNC>.mcc<MCC>.3ppgnetwork.org" or "spn<SPN>.ipxsp.org" domains at their earliest convenience. Of course, usage of "mnc<MNC>.mcc<MCC>.gprs" for the uses as stated in section **Error! Reference source not found.**, is *not* deprecated and should continue as per normal.

2.5 Host names for the evolved packet Core (EPC)

The naming of Nodes for the Evolved Packet Core is specified in clause 19 of 3GPP TS 23.003 [8]

2.6 Host names for the IP Multimedia Subsystem (IMS)

Withn the IP Multimedia Subsystem (IMS) the following Naming Convention for IMS Nodes shall be used <Node name>.<SP Domain Name>, where

- <Node name> may consist of one or more lables that uniquely identifies the IMS node within the Service Provider network.

  To avoid conflicts with future other subdomains to the <SP Domain Name> it can be considered good practice to include ".node" as the right-most label of the <Node Name>

- <SP Domain Name> is a Domain Name that is owned by the Service provider.

  "ims.mnc<MNC>.mcc<MCC>.3gppnetwork.org" is the recommended <SP Domain Name> for all IMS Nodes.

"ims.mnc<MNC>.mcc<MCC>.3gppnetwork.org" must be used as <SP Domain Name> for IMS Nodes that are individually addressable over the IPX network by SIP or any other protocol, and where those Node Names need to be resolved over the IPX DNS system.

Examples of IMS nodes that may need to be individually addressable, are all nodes that are addressed using a SIP Route Header, such as the nodes hosting the functionalities of a P-CSCF, S-CSCF, TRF, ATCF, and eMSC-S for I2.

3 General DNS Configuration for Service Providers

3.1 Introduction

This section gives some general information on DNS server configuration for operators. For information on configuring DNS servers for specific services, see sections **Error! Reference source not found.** and **Error! Reference source not found.**.

3.2 DNS Server Hardware

It is recommended that operators have physically separate Primary and Secondary DNS servers. This helps provide the greatest service availability and allows for e.g. upgrading DNS Servers without any service interruption.

3.3 DNS Server Software

Most commonly ISC BIND (usually version 4 or version 9) is the chosen software supplied by equipment vendors with any new service equipment that utilises a DNS Nameserver. Service Providers and IPX Providers should ensure that only the most secure version is used in their live networks, and all security patches are applied. Note that no particular version of BIND is recommended, because to do so here would provide potentially out of date information to the reader.

Use of ISC BIND is fine for services which do not necessarily have a large data-fil (for example: GPRS, MMS) but for services such as ENUM where the data-fil can run into thousands, if not millions of resource records, a commercial DNS Nameserver product should be used.

Such commercial DNS Namesserver solutions can also support legacy DNS data-fil (for example, that used for GPRS roaming), thereby consolidating all operator DNS needs. Note that it is out of the scope of this document, and the GSMA, to provide any recommendations on commercial DNS Nameservers. In fact, diversity of DNS software used by Service Providers and IPX Providers gives a better overall robustness of the DNS on GRX/IPX network.

3.4 DNS Server naming

All DNS servers need to have an FQDN assigned to them. For Service Provider DNS servers connected to the GRX/IPX, the naming conventions as specified in section **Error! Reference source not found.** shall be used.

3.5 Domain Caching

Since each service (e.g. GPRS, MMS etc.) has its own domain, a separate TTL value can be set per service.

When setting the TTL value for a zone, careful consideration must be taken to ensure that the right trade-off is made between performance and consistency. A small TTL value results in a greater signalling overhead, greater processing overhead for the authoritative name server(s) and greater time for a returning a result (an example: GPRS PDP Context set-up time), but the data will be more up-to-date therefore allowing updates to propagate much more quickly. A large TTL value results in a smaller signalling overhead, smaller processor overhead for the authoritative name server(s) and usually shorter time for returning a result to the requesting entity, but the data will be more likely to be out of date and therefore resulting in updates taking longer to propagate.

It is highly recommended that negative caching is also used (available in ISC BIND versions 4.9, 8.x and 9.x and should be available in most commercial DNS solutions). Again, careful consideration should be taken, considering factors such as the frequency of updates,

signalling overhead and processing overhead of the authoritative DNS server for the domain.

3.6 Reverse Mapping

Each operator is strongly recommended to provide PTR (Pointer) records for all IP addresses that FQDNs refer to, for example for APNs, MMSC addresses and so on. This is not needed for inter-working to be successful, but rather, is recommended as it aids in trouble shooting/debugging activities such as performing a "traceroute".

Reverse mapping for IPv4 addressing uses the "in-addr.arpa" domain, and reverse mapping for IPv6 addressing uses "ip6.arpa". See section **Error! Reference source not found.** for more information.

3.7 Use of DNS Interrogation Modes

Two interrogation modes are defined in the DNS specifications: iterative and recursive.

In Iterative mode, a DNS server interrogates each DNS server in the hierarchy itself, in order to resolve the requested domain name. In Recursive Mode, a DNS server interrogates only the next DNS server in the DNS hierarchy. That DNS Server then takes on responsibility for resolving the requested domain name and provides a final answer back to the original requesting DNS server. **Error! Reference source not found.** below depicts both iterative and recursive queries:

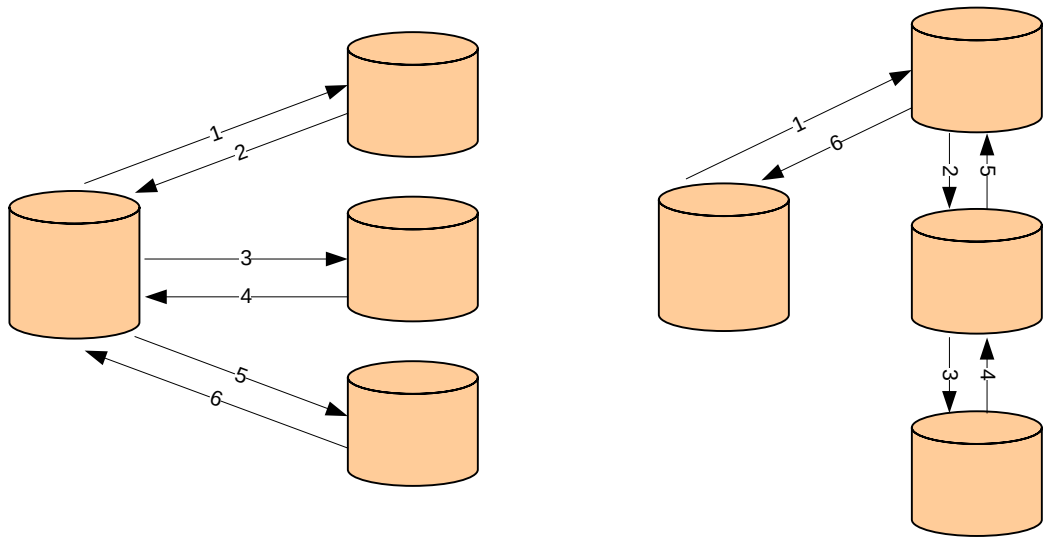

Figure 4: Iterative (left) and Recursive (Right) modes of DNS querying

In non-service aware IPX (Example: GRX), only Iterative DNS queries shall be used within the GRX/IPX. This not only saves on DNS Server load but also to enables visibility of the source of the original request at the destination, which is lost when using recursive queries.

If any recursive DNS queries are received by a DNS Server then they should be ignored. The only elements that should issue recursive DNS queries are service nodes issuing DNS requests to their Local Caching DNS Servers e.g. an SGSN querying its Local Caching DNS

Server for an APN (see section **Error! Reference source not found.** for more information on GPRS, including APN resolution).

3.8 Use of the GRX/IPX Root DNS Server

There are two possibilities to arrange DNS hierarchy. The first is for each Service Provider to configure their own authoritative DNS Server for each domain name that needs to be resolved for all inter-working and roaming partner Service Providers. The draw-back of this approach is that it is not scalable because every time a new inter-working and/or roaming partner agreement is made, or even any existing inter-working and/or roaming partner's DNS Server details change, the aforementioned authoritative DNS Server must be updated accordingly. Thus, this could be a potential operational intensive task, and most likely a frequent source for inter-working and roaming problems. This alternative may be fine for small Service Providers with few interworking and/or roaming partners, but is not recommended due to the reasons stated. Therefore, this alternative is not further detailed in the present document.

Another alternative is to use the common GRX/IPX Root DNS Server, as provided for by the GRX/IPX service provider (see section **Error! Reference source not found.** for more detail on this architecture). Using the GRX/IPX Root DNS Server enables modified DNS Server details for a Service Provider to automatically propagate to all interworking and roaming partners (subject to caching time). This alternative is the recommended one, and is thus the assumed deployment of authoritative DNS Servers in the rest of the present document.

3.9 Provisioning of Service Provider's DNS servers

Service Providers should take care to share all appropriate data to enable all roaming/inter-working partners routing to an authoritative DNS Server, that is a DNS Server where their own domain names can be resolved by others. GSMA IR.21 (PRD or GSMA InfoCentre database) and the GRX/IPX Root DNS should be used to ease such sharing of data, wherever possible.

Service Providers can provision authoritative DNS Servers themselves or outsource to another entity for example their GRX/IPX Provider.

Service providers may have all appropriate data available in a single level of authoritative DNS servers, where each authoritative DNS server holds all the appropriate data for the Service Provider.

Alternatively, Service Providers may choose to divide the appropriate data between a First level Authoritative DNS Servers and 2nd Level Authoritative DNS Servers whereby each 2nd-level Authoritative DNS server only holds a subset of the appropriate data for the Service provider.

When information about DNS servers are exchanged with the GRX/IPX Root DNS and other Service Providers for example via PRD IR.21, and when 2nd-Level Authoritative DNS server are used, it is essential to make a clear distinction between the First level Authoritative DNS servers and 2nd-Level Authoritative DNS servers. This is to ensure that only First level Authoritative DNS server are published in the GRX/IPX Root DNS such that the first query to an Operators DNS always goes the First level Authoritative DNS and that the second level

DNS servers are reached only by means of referrals from the First Level Authoritative DNS server.

3.10 Resource Records

Service Providers and IPX Providers should take care to provision only the DNS Resource Records (RRs) that are necessary for service interworking, trouble shooting and O&M (Operations & Maintenance).

3.11 Support for IPv4 and IPv6

Support for IPv4 and IPv6 on Service Provider DNS Nameservers is twofold: the ability to serve data relating to IPv4 and IPv6 addresses, and connectivity to/from the nameserver.

For configuration information in a Nameserver, both IPv4 and IPv6 information can coexist together. Service Providers just need to ensure that the Nameserver software used is capable of supporting the relevant Resource Records (RR) required. The "A" RR is used to hold IPv4 address information and the "AAAA" RR for IPv6 address information. Details on reverse mapping (IPv4/IPv6 address to domain name) are specified in section **Error! Reference source not found.**.

For connectivity to a Nameserver, it is highly recommended that all Service Provider Nameservers be reachable using IPv4. Any Nameservers serving IPv6 information should also be reachable using IPv6.

See GSMA PRD IR.34 [12] and GSMA PRD IR.40 [42] for more information on recommendations relating to IPv4 and IPv6 routing and addressing.

4 DNS Aspects for Standardised Services

4.1 Introduction

This section describes the DNS aspects of standardised services that utilise DNS. Recommendations are made, where appropriate, beyond what is defined in the referenced specifications in order to promote easier service interworking for Service Providers. The list of services below is not exhaustive and other services that utilise DNS on the GRX/IPX can be used.

If there are discrepancies between the description of the services and the referenced specifications in the following sub-sections, what is stated in the referenced specifications shall prevail.

4.2 General Packet Radio Service (GPRS)

4.2.1 Introduction

GPRS provides for a packet switched bearer in GSM/UMTS networks. Packets are tunnelled between core network nodes that may or may not be in different PLMNs, using the GPRS Tunnelling Protocol (GTP) as defined in 3GPP TS 29.060 [24].

Note that in UMTS, GPRS is referred to as "Packet Switched" access, however, this is just a naming convention, and the mechanism remains the same.

For more information on GPRS/Packet Switched access, see GSMA PRD IR.33 [39], 3GPP TS 23.060 [26], and 3GPP TS 29.060 [24].

4.2.2 APN resolution in PDP Context activation

PDP Context activations occur between the SGSN and the GGSN. PDP Contexts are activated to an Access Point Name either provided by the MS, or derived by the network (such as when the MS instructs the SGSN to use a "default" APN). It is the APN that determines to which interface on which GGSN the PDP Context is to be established. See section **Error! Reference source not found.** for the format of APNs. Further details on the APN can be found in GSMA PRD IR.33 [39].

An SGSN and a GGSN can be located in either the HPLMN or VPLMN. Both are in the same network when the subscriber is in the HPLMN and also when the subscriber is roaming in a VPLMN and is using a GGSN in the VPLMN (vGGSN). However, the SGSN and GGSN are in different networks when the subscriber is roaming but using a GGSN in the HPLMN (hGGSN).

GPRS roaming means the extension of packet switched services offered in the Home PLMN to Visited PLMNs with which the HPLMN has a predefined commercial roaming agreement.

The necessary DNS queries for resolving an APN in order to activate a PDP Context are described below. Note that the Authoritative DNS Server is usually located in the same PLMN as the GGSN, but can be located elsewhere, for example, in the HPLMN's GRX/IPX provider's network (due to the HPLMN outsourcing the Authoritative DNS Server).

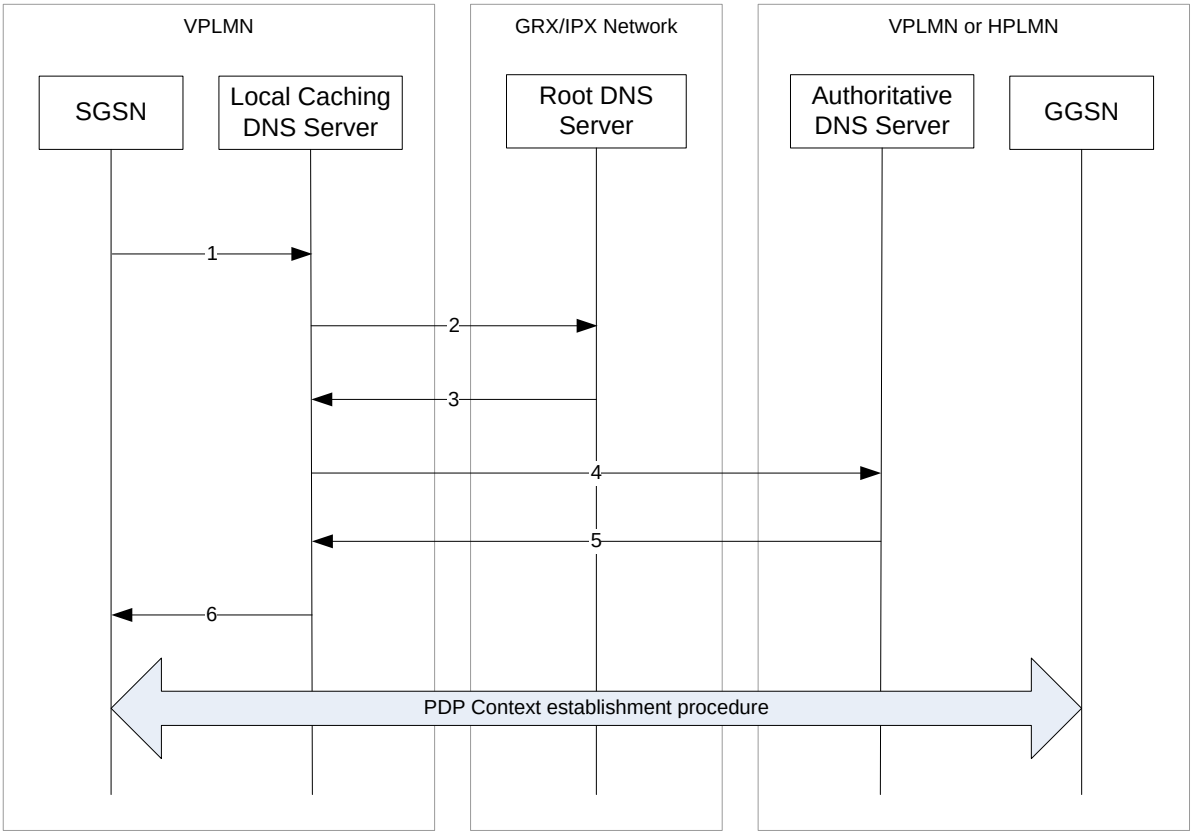

Figure 5: DNS message flow for PDP Context activations

1. Upon receiving a "PDP Context Activation" message from the MS, the SGSN checks the APN (if one was provided) against the user subscription record it previously obtained from the HLR when the MS attached, and then sends a recursive DNS Query to the DNS Local Caching DNS server.
2. The Local Caching DNS Server checks its local cache for the IP address of the requested FQDN. If it has this, processing skips to step 6. Otherwise, the Local Caching DNS Server checks its local cache for the IP address of the Authoritative DNS Server. If it does not already have this IP address, it then issues an iterative DNS Query to the Root DNS Server otherwise, processing skips to step 4.
3. The Root DNS Server replies to the DNS Query received from the Local Caching DNS with the details of the Authoritative DNS Server (for example, the FQDN and/or IP address(es).
4. The Local Caching DNS Server sends an iterative DNS Query to the Authoritative DNS Server (which will reside in the VPLMN, for vGGSN connection, and will reside in the HPLMN for hGGSN connection).
5. The Authoritative DNS Server replies to DNS Query received from the Local Caching DNS Server with the IP address of the GGSN.
6. The Local Caching DNS Server replies to the DNS Query received from the SGSN (in step 1) with the result obtained from the Authoritative DNS Server. The SGSN then commences GTP tunnel establishment and, all being well, data flow starts.

As can be seen in the above steps, there are less DNS queries for a subscriber using a GGSN in the VPLMN as the Root DNS Server is not interrogated.

Note also that the Local Caching DNS Server could also be the Authoritative DNS Server for the requested FQDN, in which case a final result can be given immediately to the SGSN.

4.2.3 Inter-SGSN handovers for active PDP Contexts

When an MS has one or more PDP Contexts activated and moves to a new Routing Area that is serviced by a new SGSN, the new SGSN needs to connect to the old SGSN in order to download the PDP Context information and any data that is still to be delivered to the MS. It can do this by either using a mapping table which has SGSN addresses against a finite set of Routing Areas, or it can translate the old Routing Area Code (as received from the MS) into a FQDN upon which to resolve to an IP address using DNS.

The former method is most commonly used for intra-PLMN SGSN handovers, and the latter is used for inter-PLMN SGSN handovers. However, both methods can be used for both types of handovers.

The latter of the two aforementioned methods is depicted below for inter- and intra-PLMN SGSN handovers. The FQDN created by the SGSN depends upon whether the SGSN handover is a Routing Area Update, Routing Area Update in a network which has Intra Domain Connection of RAN Nodes to Multiple CN Nodes or is an SRNS Relocation (see 3GPP TS 23.060 [23], section 6.9, for more information).

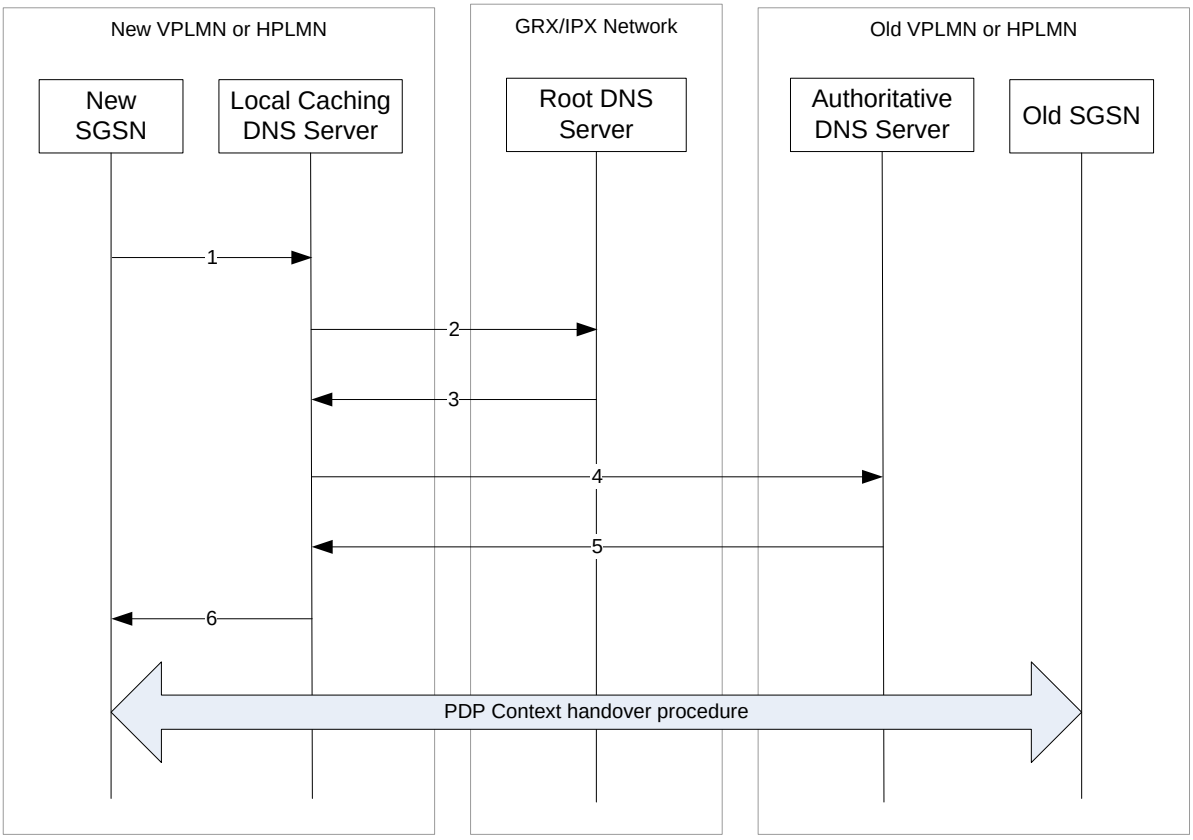

Figure 6: DNS message flow for PDP Context handovers between SGSNs

7. The new SGSN creates an FQDN using the old Routing Area Code (and the Network Resource Identifier, if available) or the old RNC ID and then issues a recursive DNS Query to the DNS server address configured in the SGSN (Local Caching DNS server).
8. The Local Caching DNS Server checks its local cache for the IP address of the requested FQDN. If it has this, processing skips to step 6. Otherwise, the Local Caching DNS Server checks its local cache for the IP address of the Authoritative DNS Server. If it does not already have this IP address, it then issues an iterative DNS Query to the Root DNS Server, otherwise, processing skips to step 4.
9. The Root DNS Server replies to the DNS Query received from the Local Caching DNS with the details of the Authoritative DNS Server (for example, the FQDN and/or IP address(es)).
10. The Local Caching DNS Server sends an iterative DNS Query to the Authoritative DNS Server (which will reside in the VPLMN, for inter-PLMN handover, and will reside in the HPLMN for intra-PLMN handover).
11. The Authoritative DNS Server replies to DNS Query received from the Local Caching DNS Server with the IP address of the old SGSN.
12. The Local Caching DNS Server replies to the DNS Query received from the SGSN (in step 1) with the result obtained from the Authoritative DNS Server. The New SGSN then commences handover with the Old SGSN.

As can be seen in the above steps, there are less DNS queries for an intra-PLMN SGSN handover as the Root DNS Server is not interrogated.

Note also that the Local Caching DNS Server could also be the Authoritative DNS Server for the requested FQDN, in which case a final result can be given immediately to the New SGSN.

4.3 Multi-media Messaging Service (MMS)

4.3.1 Introduction

MMS inter-working is where a subscriber of one operator has the ability to send and receive Multimedia Messages (MMs) to and from a subscriber of another operator. Unlike SMS inter-working, the MM is always sent to the user via his “home” service centre. This means that in all MMS inter-working scenarios, the MM is always transferred from the source operator’s MMSC to the destination operator’s MMSC. Thus, MMS interworking requires use of a standardised inter-MMSC protocol. This protocol is defined as SMTP (defined in IETF RFC 2821[13]) as profiled in the MMS specification 3GPP TS 23.140 [15].

DNS is used in MMS in order for the source MMSC to resolve the destination MMSC/SMTP server. DNS MX Resource Records, as defined in IETF RFC 1035 [2], are required for SMTP based Multimedia Message routeing and relaying. It should be noted that GSMA PRD IR.34 [12] recommends that the ".gprs" TLD should be used when utilising the GRX/IPX network as the interworking network between MMSCs. This format of FQDN, including allowed sub-domains, is defined in section **Error! Reference source not found.** of the present document.

The selection of a DNS tree/hierarchy to use (e.g. Internet or GRX/IPX) ultimately depends on the interconnection network used. The interconnection network used can in turn depend on where the MM is to be sent e.g. Internet for when delivering to an e-mail user, GRX/IPX network for when delivering to another MMS subscriber. Thus, the resolution process may differ depending on whether the MM is addressed to an MSISDN/E.164 number or to an NAI/e-mail address.

There are also different commercial models for MMS inter-working between Operators. These are essentially the "Direct Interconnect" model, where MMs are sent from Operator A to Operator B directly, and the "Indirect Interconnect Model", where MMs are sent from Operator A to an MMS Hub (and the MMS Hub then takes care of delivering the MM to Operator B).

More information on MMS interworking can be found in GSMA PRD IR.52 [9].

4.3.2 MM delivery based on MSISDN for the Direct Interconnect model

The following figure and associated numbered steps describe the direct interconnect only scenario for MMS inter-working of MMs addressed to an MSISDN/E.164 number:

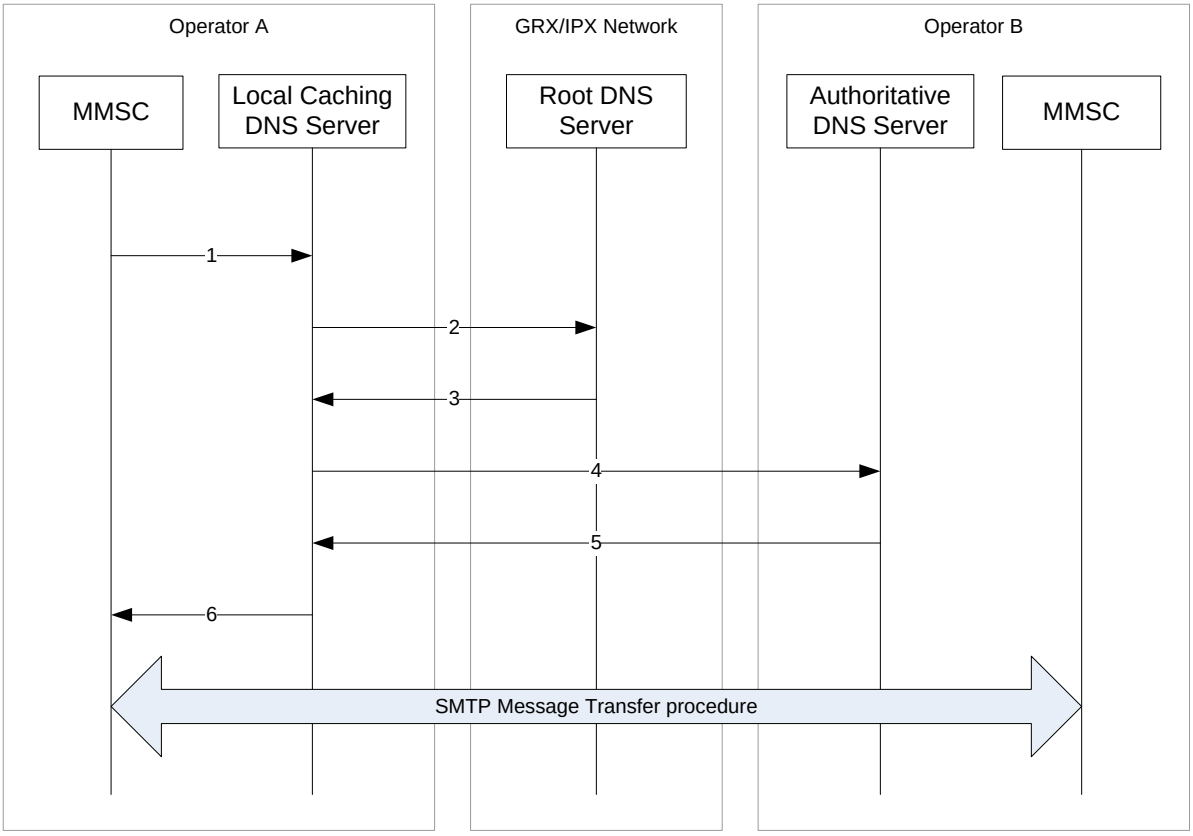

Figure 7: MMS Direct Inter-network Delivery

1. Upon receiving a Multimedia Message (MM) from the MS, the MMSC converts the destination MSISDN to an MMS FQDN (commonly of the form "mms.mnc<MNC>.mcc<MCC>.gprs") by using one of the following methods:

- An HLR look-up using e.g. the MAP_SRI_For_SM operation. This returns the IMSI, of which the MNC and MCC are extracted to create the MMS FQDN.
- An ENUM look-up (see section **Error! Reference source not found.** for more details).

The MMSC then sends a recursive DNS query for the derived FQDN to the Local Caching DNS Server.

2. The Local Caching DNS Server checks its local cache for the IP address of the requested FQDN. If it has this, processing skips to step 6. Otherwise, the Local Caching DNS Server checks its local cache for the IP address of the Authoritative DNS Server. If it does not already have this IP address, it then issues an iterative DNS Query to the Root DNS Server, otherwise processing skips to step 4.
3. The Root DNS Server replies to the DNS Query received from the Local Caching DNS Server with the details of the Authoritative DNS Server (for example, the FQDN and/or IP address(es)).
4. The Local Caching DNS Server sends an iterative DNS Query to the Authoritative DNS Server.
5. The Authoritative DNS Server replies to the DNS Query received from the Local Caching DNS Server with the IP address of the MMSC, or, a list of FQDNs and/or IP addresses if the query was for an MX record.
6. The Local Caching DNS Server replies to the DNS Query received from the MMSC (in step 1) with the result obtained from the Authoritative DNS Server. The MMSC then commences an SMTP session with Operator B's MMSC to transfer the MM.

Note that the Local Caching DNS Server could also be the Authoritative DNS Server for the requested FQDN, in which case a final result can be given immediately to the MMSC.

4.3.3 MM delivery based on MSISDN for the Indirect Interconnect model

The following figure and associated numbered steps describe the MMS hub model of interconnect for MMS inter-working of MMs addressed to an MSISDN/E.164 number:

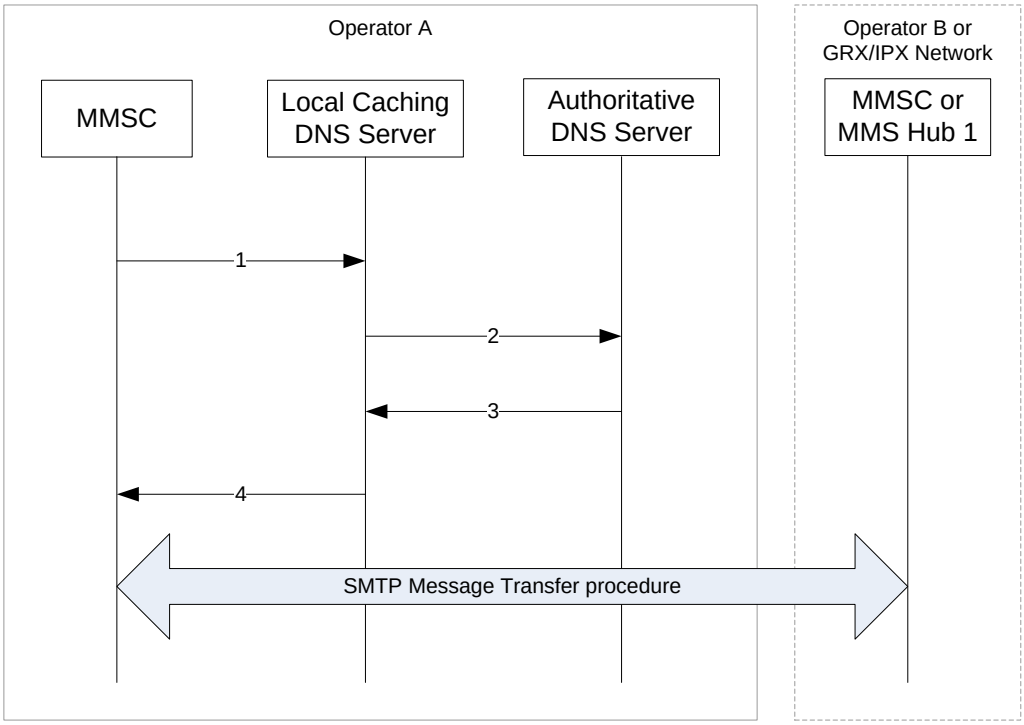

Figure 8: MMS Inter-operator Delivery

1. Upon receiving a Multimedia Message (MM) from the MS, the MMSC converts the destination MSISDN to an MMS FQDN (commonly of the form "mms.mnc<MNC>.mcc<MCC>.gprs") by using one of the following methods:

    - An HLR look-up using e.g. the MAP_SRI_For_SM operation. This returns the IMSI, of which the MNC and MCC are extracted to create the MMS FQDN.
    - An ENUM look-up (see section **Error! Reference source not found.** for more details).

    The MMSC then sends a recursive DNS query for the derived FQDN to the Local Caching DNS Server.

2. The Local Caching DNS Server checks its local cache for the IP address of the requested FQDN. If it has this, processing skips to step 4. Otherwise, the Local Caching DNS Server checks its local cache for the IP address of the Authoritative DNS Server. In this model, the Authoritative DNS Server is always known.
3. The Authoritative DNS Server replies to the DNS Query received from the Local Caching DNS Server with either the IP address of the MMS Hub to use or the destination MMSC, or, a list of FQDNs and/or IP addresses if the query was for an MX record.
4. The Local Caching DNS Server replies to the DNS Query received from the MMSC (in step 1) with the result obtained from the Authoritative DNS Server. The MMSC then commences an SMTP session either with Operator B's MMSC, or, to an identified MMS Hub, to transfer the MM.

Note that there is more flexibility in the MMS Hub architecture than shown above, depending on the MMS Hub provider used e.g. some Hub providers offer MSISDN/E.164 number

conversion/resolving, some offer complete hosting of the MMSC, and so on. See GSMA PRD IR.52 [9] for more information on MM delivery using an MMS Hub, including a more full description of the flexibility available in the architecture.

Note also that the Local Caching DNS Server could also be the Authoritative DNS Server for the requested FQDN, in which case a final result can be given immediately to the MMSC.

4.3.4 MM delivery based on NAI/e-mail address

For MMs addressed to an NAI/e-mail address (as defined in IETF RFC 2822 [15]), the message flow is the same as in **Error! Reference source not found.** except that the Internet's root DNS servers and authoritative DNS servers are used, possibly with the use of referral DNS servers too.

4.4 WLAN Inter-working

4.4.1 Introduction

Error! Reference source not found. shows how local login and roaming login differ; it also demonstrates how Roaming Partners actually connect to each other via inter-operator network. Case 1 is an example of normal local login in the hot spot of Visited PLMN, where the user inserts his username & password and is authenticated in the Visited PLMN. In this case, the RADIUS Roaming Network is not utilised.

Case 2 in **Error! Reference source not found.** refers to a roaming login, where the user inserts his username (with realm) and password in the hot spot of the Visited PLMN and authentication and request is sent by way of a proxy to Home PLMN. The User is then authenticated in the Home PLMN. Necessary RADIUS messages are transferred between RADIUS Roaming Proxies using the IP based Inter-PLMN network, that is, the GRX/IPX.

Error! Reference source not found. shows also in principle the difference between the following two authentication methods:

- Web Based Authentication
- SIM Based Authentication

Web Based (that is, using username/password) authentication is considered as an existing first phase solution for the WLAN authentication. However, in the future there will be a target solution utilising EAP solutions, where the Home PLMN HLR is involved.

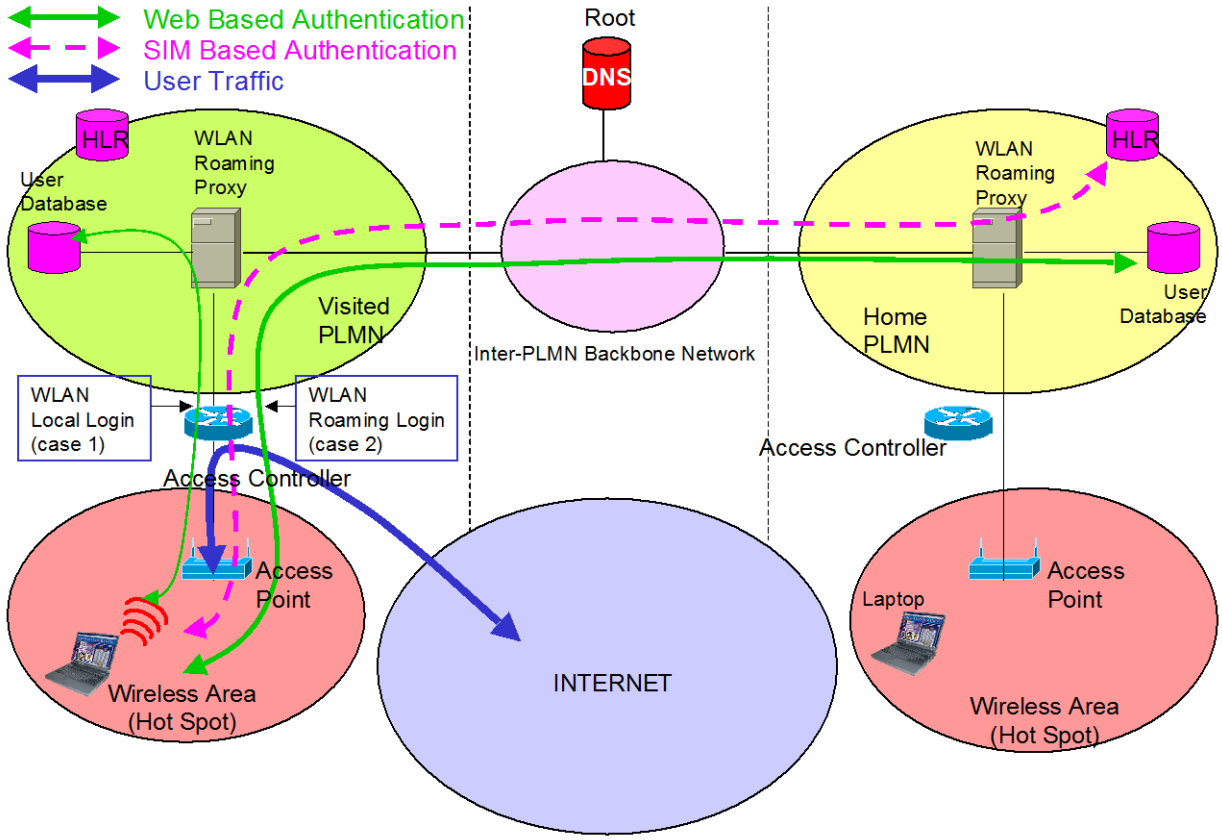

Figure 9: WLAN user authentication mechanism

The GRX/IPX network is used for transporting RADIUS authentication and accounting messages for WLAN roaming services only, WLAN user data is *not* carried over GRX/IPX.

The IP address of the WLAN Roaming Proxy must be reachable via the GRX/IPX. Please note that the first phase of WLAN roaming will not use the GRX/IPX Root DNS at all since the IP addresses of the Home PLMN RADIUS server is statically configured in the Visited PLMNs RADIUS server (the "next hop" list). In fact, RADIUS does not provide for a DNS type solution for realm to AAA entity mapping. The utilising of Root DNS may be required in future WLAN roaming solutions where Diameter instead of RADIUS is used, as Diameter does provide for an optional realm to AAA entity mapping.

More information on WLAN roaming can be found in GSMA PRD IR.61 [10].

4.5 IP Multi-media core network Sub-system (IMS)

4.5.1 Introduction

The IP Multi-media core network Sub-system (IMS) provides a standardised architecture for providing feature rich, multimedia services/applications, such as speech communication, real-time and turn-based gaming, shared online whiteboards etc. IMS services/applications rely on sessions managed by the Session Initiation Protocol (SIP), as defined in IETF RFC 3261 [38], and profiled in 3GPP TS 24.229 [35] (which includes a set of standardised extensions) for use by Service Providers.

Diameter is also used on some interfaces in the IMS architecture, however, these are intra-Service Provider interfaces and so are outside the scope of this PRD.

Error! Reference source not found. shows an end-to-end IMS session. Only the basic architecture of involved IMS network elements is shown. Please note that signalling and user data of an IMS session are separated. Signalling and user data make use of different PDP contexts, but use the same (originating) IP address.

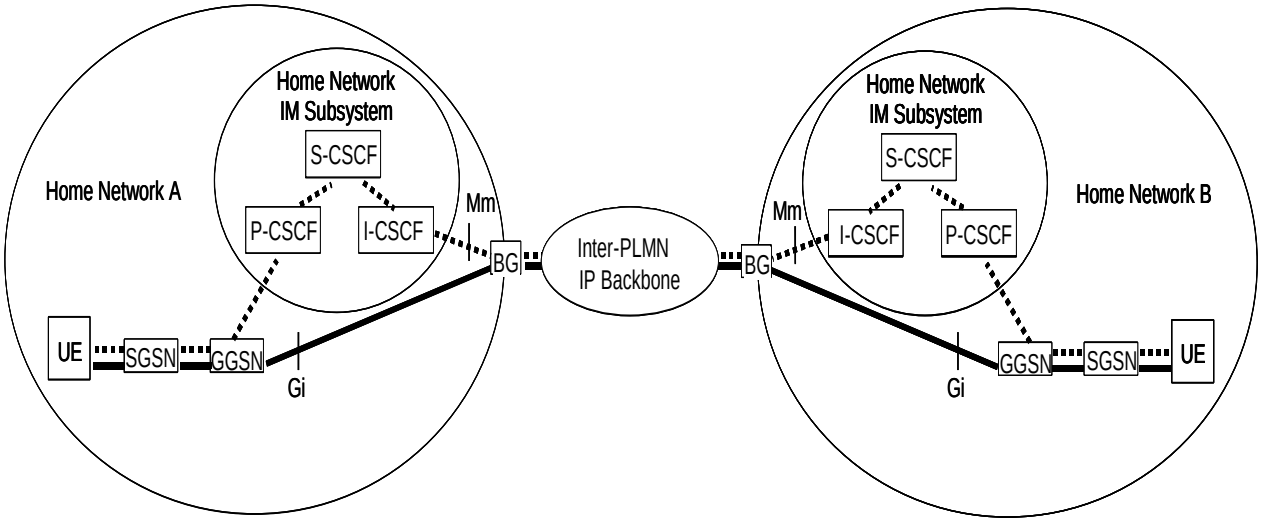

Figure 10: IMS Session Inter-working

IMS subscribers are addressed by SIP URIs or E.164 numbers represented as Tel URIs or SIP URIs with the "user=phone" option. ENUM is specified in IMS as the means to convert an E.164 number into a SIP URI. See section **Error! Reference source not found.** for more information on ENUM.

For resolving SIP URIs to SIP Servers (see IETF RFC 3263 [17]), support of the NAPTR Resource Record functionality (as defined in IETF RFC 3404 [6]) and SRV Resource Record functionality (as defined in IETF RFC 2782 [18]) is needed in a Service Provider's DNS servers.

More information on IMS roaming and interworking can be found in GSMA PRD IR.65 [11].

4.5.2 SIP server configuration

There are several RFCs covering use of SIP in the DNS. These include IETF RFC 3824 [24], IETF RFC 3263 [17], and IETF RFC 3403 [6].

The reason this configuration is needed is as follows:

When a SIP session is initiated by a user, they address the session to either a SIP URI (e.g. kim@example.com) or an E.164 number. In both cases, the IMS needs to know the IP address of the SIP server to which it can route the session. The SIP server information contains the detail needed to provide the destination network's SIP server IP address to the calling network based on the information in the SIP URI.

The approach described in this section is compliant with these RFCs and consists of 4 separate steps. It is consequently known as the “4-step approach”.

In order to improve performance/session establishment time, use of explicit IP addresses instead of FQDNs eliminates the need for some DNS lookups and retains compatibility with existing standards. However, using IP addresses instead of FQDNs is more restrictive.

4.5.2.1 Step 1

This is the ENUM related step and is performed only for cases where the service has been addressed to an E.164 number. An IMS call to a user using the format bob@example.com would not require this step. Example of DNS data for a particular SIP URI and its servers can be found in section **Error! Reference source not found.**

4.5.2.2 Step 2

Having obtained the destination domain name the DNS is asked to provide matching SIP Server Location Information. One or more NAPTR records may be retrieved and the calling application examines these records to find the best match based on priorities and the desired SIP protocol variant:

```
mnc001.mcc234.3gppnetwork.org. IN NAPTR  50 100 "s" "SIP+D2U"  "" _sip._udp.example.com.
mnc001.mcc234.3gppnetwork.org. IN NAPTR  90 100 "s" "SIP+D2T"  "" _sip._tcp.example.com.
mnc001.mcc234.3gppnetwork.org. IN NAPTR  90 100 "s" "SIPS+D2T" "" _sips._tcp.example.com.
```

In the above example, “D2U” indicates UDP-based SIP, “D2T” indicates TCP-based SIP, and “SIPS+D2T” indicates UDP-based unencrypted SIP.

The presence of these fields indicates what variations of SIP are supported on a given SIP server.

The "s" flag means the next stage is to look up an "SRV" record

4.5.2.3 Step 3

An example set of SIP server SRV records is as follows:

```
_sip._tcp.example.com.      SRV 0 1 5060    sipserv1.example.com.
_sip._tcp.example.com.      SRV 0 2 5060    sipserv2.example.com.
_sip._udp.example.com.      SRV 0 1 5060    sipserv1.example.com.
_sip._udp.example.com.      SRV 0 2 5060    sipserv2.example.com.
_sips._tcp.example.com.     SRV 0 1 5060    sipserv3.example.com.
_sips._tcp.example.com.     SRV 0 2 5060    sipserv4.example.com.
```

For each of the variations of the SIP protocols supported the SRV records describe:

- name of the server;
- which port number SIP uses; and
- where there are multiple servers, the weights & priorities to allow rough load balancing.

The calling network asks the DNS for a SRV record for the host corresponding to the specific service/protocol/domain combination that was returned in Step 2

If there are multiple records with the same service/protocol/domain combination, the caller must sort the records based on which has the lowest priority. If there is more than one record with the same priority, the record with the highest weight is chosen.

From the SRV record get the corresponding server name.

There is potential flexibility in this step for the destination operator to receive the SIP traffic on different servers depending on the desired variation of the SIP protocol – TCP, UDP, encrypted, unencrypted.

4.5.2.4 Step 4

For the server name returned in Step 3, do a standard DNS lookup to finds its IP address

This is a normal "A" (address) record lookup

```
sipserv1.example.com.          IN A    101.1.2.3
sipserv2.example.com.          IN A    101.1.2.4
```

4.5.3 Domain Names used

The domain names used for IMS based services are SIP Server names, however, there are no restrictions in the standards as to what these domain names shall be (other than the normal FQDN rules, as specified in the likes of IETF RFC 1034 [1] and IETF RFC 1035 [2]). However, for service providers interconnecting across the GRX/IPX network, it is recommended to use an MCC/MNC sub domain of ".3gppnetwork.org" as this is supported already on the GRX/IPX DNS and also allows for SIP URIs returned using ENUM on the GRX/IPX as specified in section **Error! Reference source not found.**.

It should be noted that right now, more "user friendly" domain names are not yet directly supported on the GRX/IPX DNS. Work on supporting a much wider set of domain names is ongoing.

4.6 Generic Authentication Architecture (GAA)

4.6.1 Introduction

The Generic Authentication Architecture is defined in 3GPP TS 33.220 [19]. It is a standardised mechanism for securely distributing shared keys for later use by applications on the UE.

NOTE: The address of the Bootstrapping Server Function (BSF) used by the UE is dependent on whether USIM or ISIM is used in bootstrapping. See 3GPP TS 23.003 [8], section 16.

4.7 Generic Access Network (GAN)

4.7.1 Introduction

The Generic Access Network is defined in 3GPP TS 43.318 [20] and 3GPP TS 44.318 [21]. It provides for using unlicensed radio spectrum for accessing the GSM core network in order to provide normal GSM services including both CS and PS. It was based on the work done by the UMA forum.

4.8 Secure User Plane Location (SUPL)

4.8.1 Introduction

The Secure User Plane Location feature is defined in OMA OMA-AD-SUPL-V1_0-20070615-A [27]. It provides a mechanism for carrying location information between a user's SUPL Enabled Terminal (SET) and SUPL Location Platform (SLP) in a Service Provider's network, in a way that does not rely on modifications to any network interfaces or elements between the SET and SPL. This information can then be used by the Service Provider to calculate the SET's location.

4.9 Enhanced Packet Core (EPC)

4.9.1 Introduction

The Enhanced Packet Core is defined in 3GPP TS 23.401 [28] and 3GPP TS 23.402 [29]. It provides for a new and much more efficient PS core network to support E-UTRAN and serves as part of the Enhanced Packet System (EPS).

It should be noted that EPC used to be known as SAE (Service Architecture Evolution) and E-UTRAN used to be known as LTE (Long Term Evolution) RAN.

4.10 IMS Centralised Services (ICS)

4.10.1 Introduction

The IMS Centralised Services feature is defined in 3GPP TS 23.292 [30]. It enables the provisioning of Supplementary Services and value added services (such as those offered today via CAMEL) to the CS domain from IMS.

4.11 Access Network Discovery Support Function (ANDSF)

4.11.1 Introduction

The Access Network Discovery Support Function (ANDSF) is defined in 3GPP TS 23.402 [29]. It contains data management and control functionality necessary to provide network discovery and selection assistance data according to Service Provider policy. The ANDSF responds to requests from the UE for access network discovery information and may be able to initiate data transfer to the UE, based on network triggers.

4.12 Mobile Broadcast Services (BCAST)

4.12.1 Introduction

Mobile Broadcast Services is a service enabler defined by the OMA in OMA-TS-BCAST_Service_Guide-V1_1-20100111-D [40]. This enables service/content providers to describe the services and content available (either free, subscription or one-off fee) and how to access them as Mobile Broadcast services either over a Broadcast Channel or over an Interaction Channel. From the user perspective the Service Guide can be seen as an entry point to discover the currently available or scheduled services and content, and to filter those based on their preferences.

Discovery of a Service Guide Function is performed using DNS SRV records, or optionally, using an FQDN derived from the IMSI, as specified in section 6.2.1 of OMA-TS-BCAST_Service_Guide-V1_1-20100111-D [40]. The domain name to use when deriving the FQDN from the IMSI is specified in section **Error! Reference source not found.** of the present document.

4.13 The XCAP Root URI on Ut Interface for MMTEL/IMS profile for Voice and SMS (XCAP)

4.13.1 Introduction

XCAP is a protocol defined in IETF RFC 4825 [44], 3GPP TS 24.623 [45], and is part of the IMS profile for Voice and SMS documented in IR.92 [46]. This is used in manipulation of supplementary service configuration.

The XCAP Root URI is defined in IETF RFC 4825 [44], and is used to identify the XCAP Root, which is a context that contains all the documents across all application usages and users that are managed by the XCAP server.

The XCAP Root URI takes the following format:

"http://xcap.domain"

The domain part of the XCAP Root URI is derived in accordance with 3GPP TS 23.003 [8], section 13.9.

4.14 RCS - Rich Communication Suite

4.14.1 4.14.1 Introduction

RCS/RCS-e as specified in the RCS/RCS-e specifications [48] is a simple and interoperable evolution to voice and text, which enables customers to send instant messages, video chat and exchange files in real time, that is rich call with content sharing, chat, file sharing etc. All functions are built into the address book of mobile devices. RCS/RCS-e focuses on the communications service aspects building on established interoperability principles within the mobile operator ecosystem providing service definition, functional description and technical realisation to develop new service packages for today's 'always-on' mobile users enabling seamless user experience.

The description and the use of the reserved subdomain names will be referenced in the RCS/RCS-e specifications where this domain can be used by all RCS/RCS-e specification versions.

4.15 Evolved Packet Data Gateway (ePDG)

4.15.1 Introduction

The Evolved Packet Data Gateway is defined in 3GPP TS 23.402 [29]. It provides PDN connectivity to the Evolved Packet Core (EPC) over untrusted non-3GPP IP access networks.

4.16 Network element self-configuration

4.16.1 Introduction

The concept of network element self-configuration is described in 3GPP TS 32.501 [50]. The network elements self-configuration can be applied e.g. for eNBs that is defined in 3GPP TS 36.300 [51].

4.17 EPC and GPRS coexistence

4.17.1 Introduction

When configuring the authoritative DNS server, a mobile operator supporting both GPRS and EPC roaming must consider that different DNS query procedures can be used in GPRS (A/AAAA-record queries) compared with EPC (S-NAPTR queries).

GSMA PRD IR.88 [52] provides further details on the DNS configuration requirements for different GPRS (2G/3G) and EPC coexistence scenarios.

4.18 MBMS Service Announcement Bootstrapping

4.18.1 Introduction

The method for bootstrapping for MBMS service announcement is described in 3GPP TS 26.346 [53]

5 E.164 Number Translation

5.1 Introduction

Telephone numbers compliant with E.164 that identify subscribers cannot be used on their own for addressing in IP based networks. The Internet Engineering Task Force have defined a mechanism for converting E.164 numbers to an "IP friendly" address relevant to the service that the user wishes to use. IETF RFC 3761 [3] defines the mapping of E.164 numbers to services using DNS. This mechanism is known as ENUM.

ENUM only provides for E.164 numbers (as defined in ITU-T Recommendation E.164 [37]), that is, telephone numbers in their full/international format of CC+NDC+SN. If a given dialled number is not in the E.164 number format for example national format, it needs to be converted to this format first. If a given dialled number is a short code or some other type of Service Provider address, it will need to be mapped to an E.164 number, or else, be resolved by a defined reverse lookup function to an E.164 number.

There are two types of ENUM: Public ENUM and Private ENUM. There are a number of different terms used in the Telecommunications industry to refer to private ENUM. For example: “Carrier ENUM”, “Infrastructure ENUM” and "Operator ENUM". This document uses the term “Carrier ENUM”.

Public ENUM has the following characteristics:

- Uses the public internet DNS infrastructure.

- End User data is exposed to the “public" and can be read by anyone.
- Uses the “e164.arpa” top level domain.
- Intention is to provide an on-line end user opt in service and application directory.
- Data populated by end users who choose to opt-in and populate their data.
- Data required to be managed by end user and could be out of date because it is up to the end user to keep it up to date.
- May contain “personal” data if the user desires. There are privacy concerns but placing this data in ENUM is according to user choice.

Carrier ENUM has the following characteristics:

- Uses a private DNS infrastructure
- Provides a private routeing enabling technology that is transparent to the end user.
- Cannot be directly accessed by end users or public Internet users as data is contained within a secure end-to-end network.
- Uses a different top level domain to avoid any detrimental effects caused by unintended leakage to the Internet caused by mis-configuration in a Service Provider’s network.
- Data can be only be exchanged by those connected to the private routing infrastructure.
- Data populated by Service Providers who are the telephone number assignee or their designated Agents.
- Data must follow DNS caching and Time To Live requirements so as to avoid call/session failure.
- Contains only data required for call/session routing or network discovery to the destination Service Provider.

Public ENUM cannot be used on the GRX/IPX network, as it is too insecure, incomplete, non-private and has no guaranteed QoS or integrity of data. Therefore, Carrier ENUM should be used on the GRX/IPX network. The following sub-sections describe how Carrier ENUM is implemented in the GRX/IPX network for inter-Service Provider services (referred to hereafter as "Carrier ENUM on the GRX/IPX").

5.2 General Requirements

Carrier ENUM on the GRX/IPX is designed to provide the following high-level requirements:

- A competitive environment, where more than one vendor or service bureau can offer ENUM functionality.
- Equal accessibility, such that the ENUM data fill is available to all entities that need it but also restricted to those that do not in a way that does not disadvantage them.
- Accuracy in the data populated, in that existing authoritative databases with the required information are accessible to query.
- Support for the establishment of permissions and/or reciprocal business policy agreements between Service Providers to determine routing and priorities for managing differing types of network traffic requesting access into a terminating Service Provider's network along with the need to identify the querying party.

More lower-level/detailed requirements are contained within relevant sub-sections of section 5, below.

5.3 Architecture

5.3.1 Introduction

The following details the GSMA recommended structure and delegation model of Carrier ENUM on the GRX/IPX network. An alternative model is described in **Error! Reference source not found.**, for Service Providers who want to provide their own ENUM solution. Analysis on the appropriateness and viability of each model (including how they can both co-exist) is provided in IN.12 [31].

In the following architecture model, a hierarchy of ownership is defined. DNS is designed to have a hierarchical structure allowing control of different parts of the overall structure to be established by business policy and data access requirements of the destination network whilst supporting standard DNS tiers. E.164 numbers also have a hierarchical structure and this can be mapped onto the DNS structure on the GRX/IPX network.

5.3.2 Data Delegation Structure

To ensure proper distribution and scalability of the DNS structures, ENUM was originally designed to use a strict tiered system, consisting of 3 tiers as follows:

- Tier 0 – Global level
    - Authoritative for the ENUM top level domain.
    - Under this domain are pointers to the Tier 1 authoritative servers.
- Tier 1 – Country Code level (CC)
    - Authoritative for ITU-T assigned E.164 country codes.
    - Under this domain are pointers to the Tier 2 authoritative servers.
- Tier 2 – Service Provider level (NDC)
    - Authoritative for National Destination Codes and individual Subscriber Numbers.
    - Under this domain are the individual Subscriber Numbers each with one or more (Naming Authority Pointer) NAPTR records associated with them.

This is depicted as follows, where the arrows show delegation:

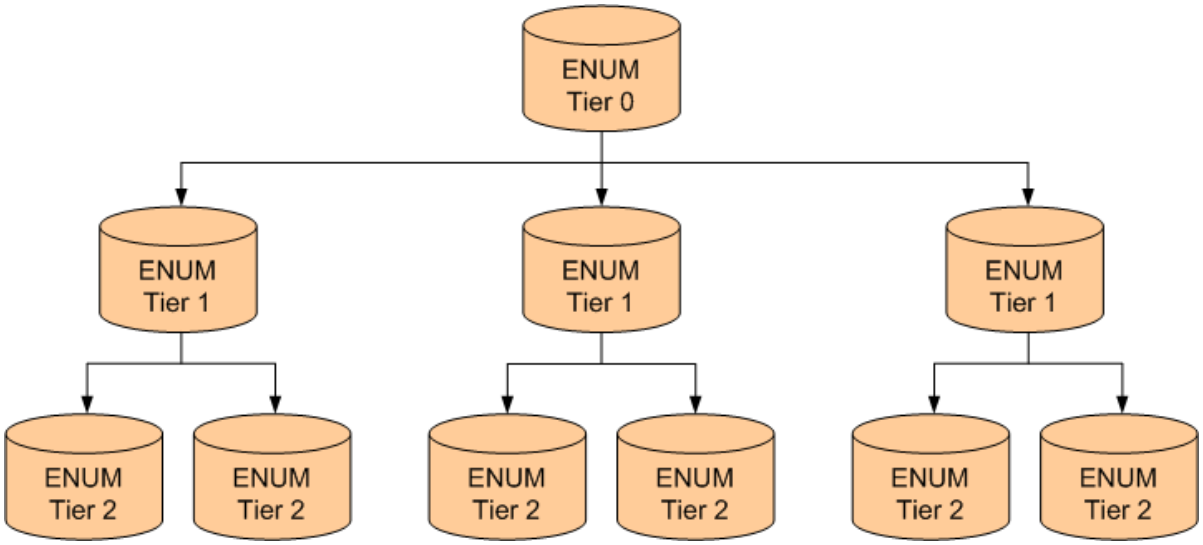

Figure 11: ENUM logical hierarchy

The ENUM hierarchy described above is logical, and does not require that each logical ENUM Tier is mapped to individual ENUM servers. The logical architecture allows for a large flexibility when it comes co-locating different tiers of the ENUM hierarchy onto ENUM servers. Figure 11a gives some examples of possible co-location of the logical Tiers onto physical ENUM servers.

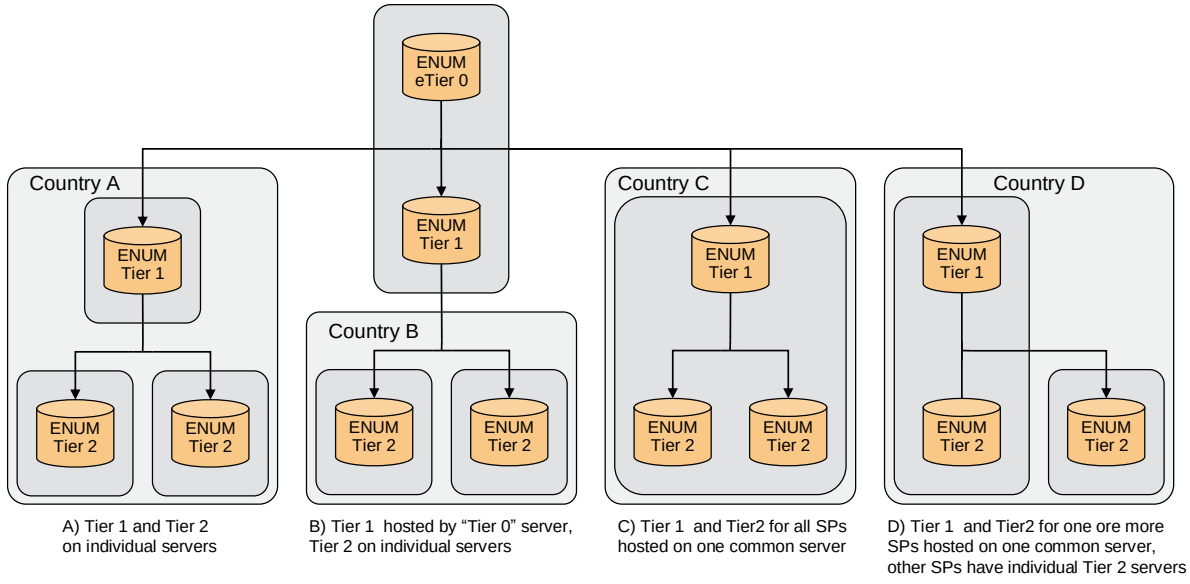

Figure 12: Examples of co-location of the ENUM Logical Tiers to ENUM servers

Figure 11a provides only a set of examples on how the logical Tiers can be mapped onto ENUM servers, and does not preclude other configurations such as co-locating both Tier 1 and Tier 2 for a country on the Tier 0 server or the possibilities to support further Tiers below Tier 2 if needed. The possibility to support several Logical Tiers for different countries on one ENUM server is also possible allowing a Service provider with operations in several countries to co-locate the logical Tier2 for all or several of those countries on a common multi-country Tier 2 ENUM server.

In countries where Service Provider Number Portability is employed, this flexibility of the ENUM server and Tier structure allows each individual country to agree on different types of arrangements of the ENUM structure suiting the situation and requirements of that specific country.

Therefore, Carrier ENUM on the GRX/IPX builds upon this tiered structure, including the flexibility to allow diverse national level, and Service Provider level, implementation strategies. The following diagram depicts the overall logical architecture for Carrier ENUM on the GRX/IPX.

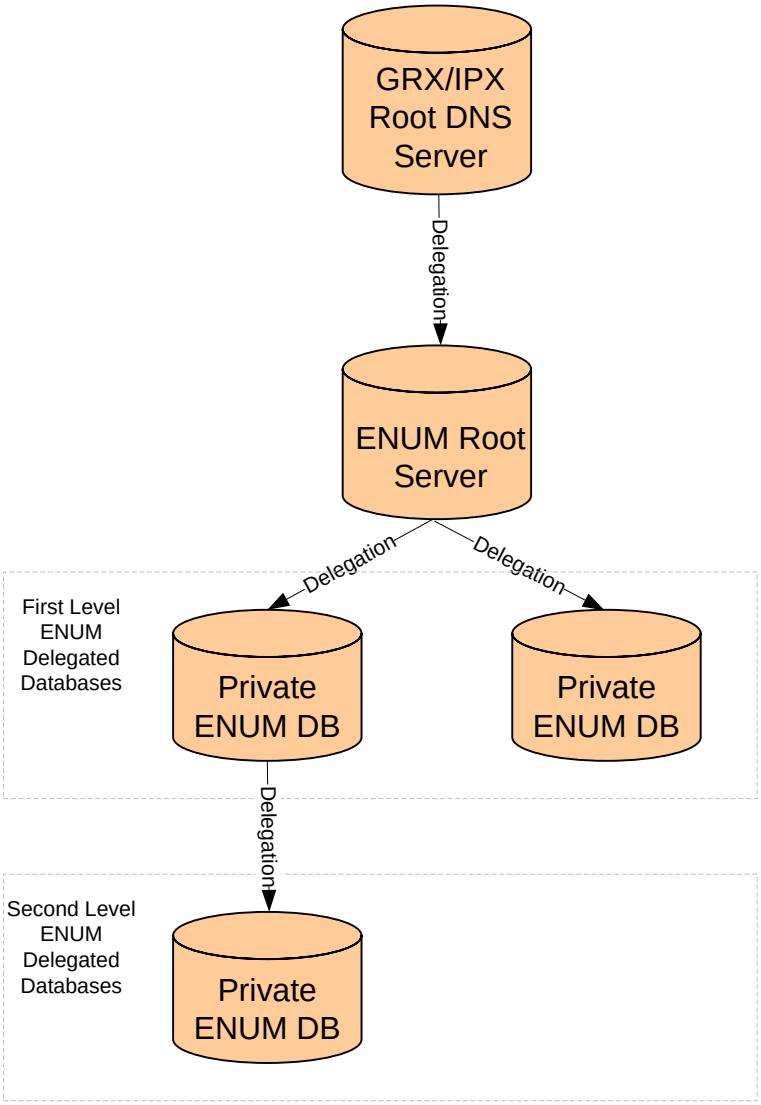

Figure 13: Logical architecture for Carrier ENUM on the GRX/IPX

NOTE 1: Represented in the above figure are *logical* entities and thus one or more instances of those logical entities can be offered by one physical server.

NOTE 2: The GRX/IPX Root DNS Server delegates the agreed Carrier ENUM on the GRX/IPX top level domain name, as detailed in section **Error! Reference source not found.**, to the ENUM Root Server. The ENUM Root Server and all Private ENUM databases located directly or in-directly below are

delegated different parts of the E.164 number (which commonly, although not always, align to the CC, NDC and SN).

In practice there are many considerations relating to DNS delegation. Who maintains data integrity and has control of particular ENUM databases and E.164 number ranges is a matter of concern to Service Providers, especially in countries where numbers are portable between mobile and fixed operators and there are potentially a large number of organisations involved. In the “real world” the delegation structure may not follow the model shown above and different Tiers may share the same server and delegation model.

Commercial arrangements for DNS/ENUM delegation, control and administration; are not described in this document. The scope is restricted to describing only technical details.

5.3.3 Resolution procedure

A given E.164 number is converted to a FQDN using the procedure described in IETF RFC 3761 [3]. The resultant FQDN used in Carrier ENUM on the GRX/IPX slightly differs from that defined in IETF RFC 3761 [3] though, and is defined below in section **Error! Reference source not found.**.

GRX/IPX Carrier ENUM utilises the GRX/IPX DNS structure, as defined in section **Error! Reference source not found.**. Therefore, a Slave GRX/IPX Root DNS Server is queried first, then the ENUM Root Server, and then one or more Private ENUM Database servers, until a final result is obtained.

The following depicts an example successful ENUM resolution using Carrier ENUM on the GRX/IPX:

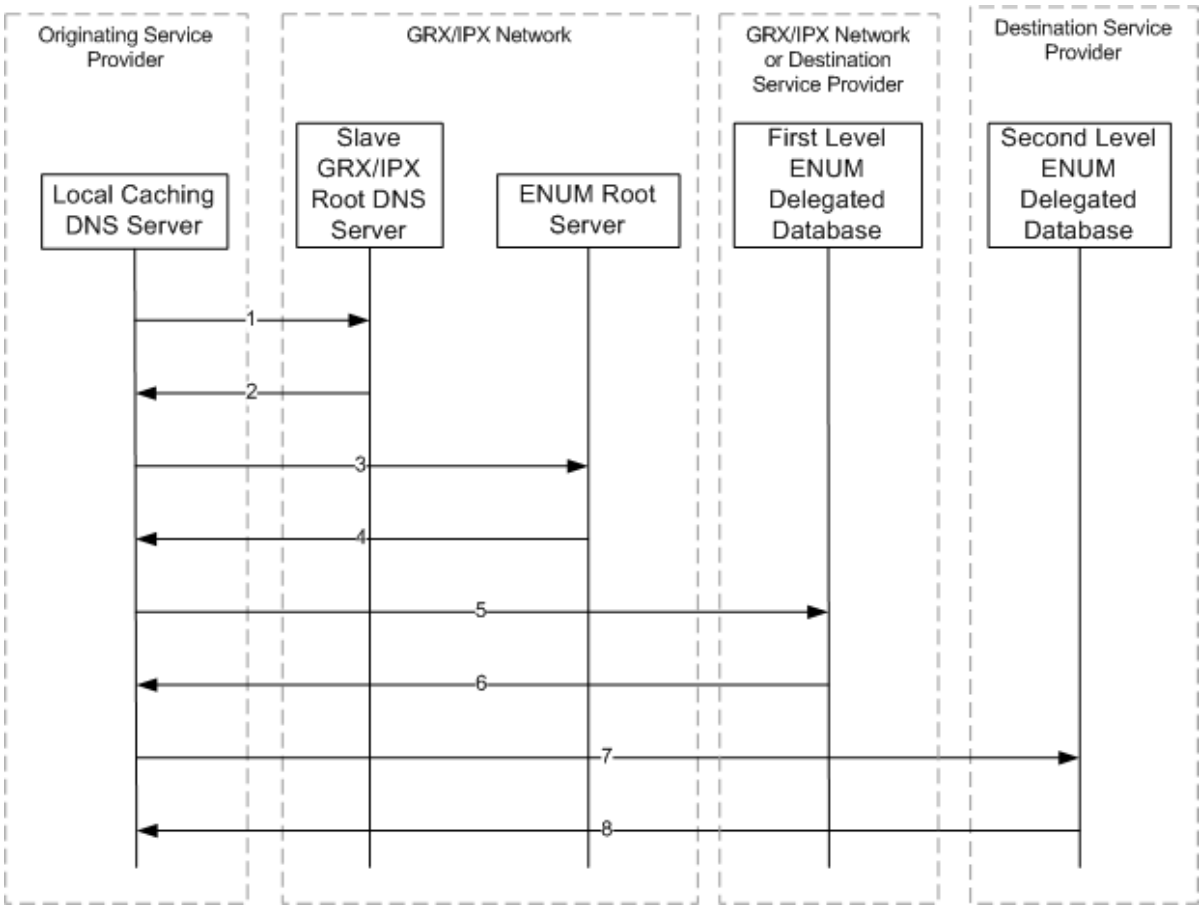

Figure 14: Example ENUM resolution for an IMS session establishment

The numbers in the messages in the above diagram refer to the below:

1. Originating Service Provider's Local Caching DNS Server sends the DNS query to the GRX/IPX Root DNS Server.
2. GRX/IPX Root DNS Server replies with a referral to the ENUM Root Server.
3. Originating Service Provider re-sends the DNS query, but to the ENUM Root Server.
4. ENUM Root Server replies with a referral to the First Level ENUM Delegated Database Server.
5. Originating Service Provider re-sends the DNS query to the First Level ENUM Delegated Database Server.
6. First Level ENUM Delegated Database Server replies with either a referral to a Second Level ENUM Delegated Database Server, or a final result.
7. If a referral was received, then Originating Service Provider re-sends the DNS query to the Second Level ENUM Delegated Database Server.
8. Second Level ENUM Delegated Database Server replies with a final result.

NOTE 1: As per normal DNS procedures, each reply a Service Provider receives is cached for a certain amount of time allowing some later queries to be

answered from the cache instead of always querying other DNS/ENUM servers.

NOTE 2: The Originating Service Provider may apply an optional policy check upon receiving any response.

It is recommended that no more than two ENUM Delegated Databases (that is First Level and Second Level) be provisioned in a resolution "chain" for an E.164 number. However, an originating Service Provider for ENUM queries needs to be able to query more than this that is at least as many queries as there are labels in the ENUM FQDN (see section **Error! Reference source not found.**).

5.3.4 Access to ENUM servers and Interconnection policy

Service Providers connected to the GRX/IPX network will be able to perform an ENUM Query and obtain a result dependant on the policy established for data accessibility. That is, either the querying Service Provider has access to all ENUM servers, or, an error is returned (see section **Error! Reference source not found.** for more details on responses).

In some instances, it is possible to resolve an E.164 number to a URI, even though there is no interconnection agreement (commercial or technical) with the target Service Provider for the identified service. This may happen to an originating Service Provider in a number of cases, including (but not necessarily limited to) the following:

- Where access to the ENUM Tier-2 is available due to interconnection agreement with the destination Service Provider, but for a different service for example Push to Talk over Cellular (PoC) agreement in place but no agreement for Voice/Video Share (both services are based on IMS and hence use the same URI scheme).
- Using a localised ENUM architecture, such as that detailed in Annex B.
- Automatic derivation of the URI from the E.164 number for example MAP_SRI_For_SM look-up (also known as an "IMSI look-up"), back-end connection to a number range database (for example MNP database), static look-up table of E.164 number block data assignment. For examples of architectures, see **Error! Reference source not found.**.

In such a case, extra analysis needs to be performed by the Originating Service Provider on the derived URI to check local policies on interconnection with regards to the Destination Operator and the service being requested by the subscriber. Such a policy should also dictate which interconnect address or third-party interconnect provider should be used in routing the service.

For example, policy checking could take place in the service node (for example. MMSC, S-CSCF, AS), or, it can take place in the local DNS caching server that is taking care of the ENUM resolution. In both cases, there are commercially available solutions.

5.3.5 Number Portability considerations

Number Portability implementations differ from country to country, based on national requirements and organisation of NDCs, thus there is no single solution that suits all

countries. Therefore, the ENUM architecture implemented by Service Providers who are part of a NP "group", need to provide a common approach between them.

Different implementation options for support of Number Portability can be identified, where some rely on the involvement of the Tier-1 as:

- Combined Tier-1 and Tier-2 ENUM database, at least per NP "group"
- Intelligent Tier-1 ENUM database that always redirects the querying entity to the currently serving Service Provider

Other implementation options do not rely on the involvement of the Tier-1 and are managed solely based on the service provider Tier-2 include

- Redirection from Tier-2 of number range owning Service Provider to the Tier-2 of the currently serving Service Provider
- Final response from the Tier-2 of the number range owning Service Provider on behalf of the Tier-2 of the currently serving Service Provider

The Number Portability resolution may be based on Information that is natively stored on the ENUM server, or the Tier-1 or Tier-2 servers may interact in real-time with legacy systems for Number portability to derive information about the currently serving Service Provider, and provide responses based on this information.

Another aspect of number portability that needs to be considered is when the Tier-1 redirects queries to the Tier-2 of the number range owning Service Provider, which shall provide responses to cater for ported numbers. In case not all Service Providers within an “NP group” participates in the GRX/IPX Carrier ENUM, there is no “natural” Tier 2 server that would be the first to query and which would cater for numbers that are ported out from that Service provider.

See **Error! Reference source not found.** for more information on how to account for Number Portability in ENUM.

5.4 Technical Requirements

5.4.1 Introduction

The implementation of Carrier ENUM on the GRX/IPX is currently in the process of being rolled out. The following sections specify the agreed implementation details for ENUM on the GRX/IPX network so that it is fully interoperable between all network entities.

5.4.2 ENUM Query

Carrier ENUM on the GRX/IPX reuses the ENUM Query procedures and format as described in IETF RFC 3761 [3], with the exception that the top level domain name "e164enum.net" shall be used instead of "e164.arpa". For example, for the E.164 number 447700900123, the translated ENUM FQDN to be resolved would be 3.2.1.0.0.9.0.0.7.7.4.4.e164enum.net. Therefore, all ENUM Servers that are part of the Carrier ENUM for GRX/IPX shall support ENUM queries to this ENUM FQDN.

NOTE: In addition to "e164enum.net", other top level domains may also be supported (for example in accordance with local in-country ENUM requirements), however they must follow "e164enum.net" service requirements. Only "e164enum.net" is mandatorily required for Carrier ENUM on the GRX/IPX.

The top level domain name "e164enum.net" has been chosen for Carrier ENUM on the GRX/IPX for the following reasons:

- To ensure there is no conflict with Public ENUM.
- It is registered on the Internet to GSMA
- Neutral to service provider technology i.e. neutral between mobile/fixed Service Providers and IPX Providers
- Has an indication of its purpose that is E.164 and ENUM
- The ".net" suffix was felt to be relevant to the use of this domain. From IETF RFC 1032 [25]:

  ".net" was introduced as a parent domain for various network-type organizations. Organizations that belong within this top-level domain are generic or network-specific, such as network service centres and consortia. ".net" also encompasses network management-related organizations, such as information centres and operations centres.

5.4.3 ENUM Response

5.4.3.1 General

All ENUM queries to the mandatory FQDN for Carrier ENUM on the GRX/IPX as defined in section **Error! Reference source not found.** shall return a result that is they should never be silently discarded by an ENUM server or firewall and so on (for example due to access control lists). The result returned can be a pointer to another ENUM Server, a final result (that is list of URIs/URLs) or a standard DNS/ICMP error.

In order to avoid querying entities having to support multiple NP solutions, terminating Service Providers in countries that use Number Portability need to provide NP corrected data in their final results. Such NP corrected final results should avoid relying upon the querying entity supporting any nationally required NP solutions local to the terminating Service Provider.

The NS RR (as defined in IETF RFC 1034 [1]) shall be used to provide a pointer to the next ENUM Server to query.

The NAPTR RR (as defined in IETF RFC 3403 [6] and IETF RFC 3761 [3]) shall be used to return a successful final response that is list of URIs/URLs for different service. The following sections provide recommendations on how to populate the fields of the NAPTR RR.

5.4.3.2 URI formats

The domain name part of URIs returned in NAPTRs shall be in the format detailed in section **Error! Reference source not found.** of the present document, to enable routing through the GRX/IPX network using the current GRX/IPX DNS.

5.4.3.2.1 SIP/IMS URI format

The SIP/IMS URI format is:

```
sip:+<E.164_number>@<xxx>.mnc<MNC>.mcc<MCC>.3gppnetwork.org;user=phone
```

where "<xxx>" can be any characters or null (if null, then the trailing "." shall not be present), and <MNC>/<MCC> are the MNC/MCC allocated to the Service Provider. Other domain names that are routable on the inter-Service Provider IP network may also be used.

“sip:” indicates the protocol to be used which in this case is SIP.

With regard to the “<xxx>” prefix there was no consensus on using any specific value of "<xxx>". However, in order to avoid conflicts with sub-domains allocated already (see section **Error! Reference source not found.**) and any possible new sub-domains for new services, the sub-domain of ".ims" is recommended.

The SIP URI parameter “user=phone” is included to explicitly indicate that the user part contains an E.164 number and is recommended in all cases. For operators that provision the SIP URI NAPTR RR only for IMS subscribers, the SIP URI parameter “user=phone” could be excluded as long as the same SIP URI is also provisioned in their HSS. For operators that provision the SIP URI NAPTR RR for both IMS and non-IMS subscribers, they should always include the SIP URI parameter “user=phone” in the SIP URI of the NAPTR RR.

The following examples are all acceptable NAPTR RR SIP URIs for IMS where the E.164 number is 447700900123, the MNC is 01 and the MCC is 234:

```
sip:+447700900123@mnc001.mcc234.3gppnetwork.org
sip:+447700900123@ims.mnc001.mcc234.3gppnetwork.org
sip:+447700900123@imsnetwork.mnc001.mcc234.3gppnetwork.org
sip:+447700900123@mnc001.mcc234.3gppnetwork.org;user=phone
sip:+447700900123@ims.mnc001.mcc234.3gppnetwork.org;user=phone
sip:+447700900123@imsnetwork.mnc001.mcc234.3gppnetwork.org;user=phone
```

For Service Providers who offer IMS based services it is recommended that, where possible, all of that Service Provider's subscribers should be provisioned with a SIP URI. However, Service Providers should be warned that if a subscriber who does not have an HSS entry is provisioned with a NAPTR RR containing a SIP URI without the SIP URI parameter “user=phone”, this may result in SIP sessions/calls failing indefinitely (as the I-CSCF handling the incoming session, after not finding any corresponding user in HSS, may not be able request routeing based on the E.164 number contained in the SIP URI, due to the absence of “user=phone”). This is in contrast to when no SIP URI NAPTR RR is provisioned for the user and the session/call being alternatively delivered via the PSTN by the originating Service Provider.

It is recommended that a Service Provider should always include the SIP URI parameter “user=phone” in the SIP URI NAPTR RR and configure and set the I-CSCF to support the “local configuration option” to attempt request routeing using the E.164 number derived from the SIP URI as is described in Section 5.3.2 of 3GPP TS 24.229 [35] when the I-CSCF

receives the response to the location query from the HSS indicating that the user does not exist.

5.4.3.2.2 SIP-I/Packet Voice Interconnect URI format

The same recommendations as in section **Error! Reference source not found.** apply here, with the exception that the sub domain labelled “<xxx>" is recommended to be "sip-i" or be absent/null. This is recommended in order to avoid conflicts with reserved sub-domains (see section **Error! Reference source not found.**) and any possible new sub-domains for new services.

5.4.3.2.3 MMS URI format

The MMS ENUM URI domain format is the following:

`mailto:+<E.164_number>/TYPE=PLMN@mms.mnc<MNC>.mcc<MCC>.gprs`
where <MNC>/<MCC> are the MNC/MCC allocated to the Service Provider.

The “mailto:” prefix indicates the protocol to be used which in this case is SMTP. It should be noted that this prefix used to be "mms:", however, use of this prefix is now deprecated and should no longer be used. For more information see 3GPP TS 23.140 [15].

The following example is an acceptable mailto URIs for MMS where the E.164 number is 447700900123, the MNC is 01 and the MCC is 234:

`mailto:+447700900123/TYPE=PLMN@mms.mnc001.mcc234.gprs`

For Service Providers who offer MMS it is recommended that, where possible, all of that Service Provider's subscribers should be provisioned with an MMS URI. This allows for all MMS interconnecting Service Providers to utilise ENUM instead of MAP in order to determine the destination Service Provider and thereby reduce load on that Service Provider's HLR.

5.4.3.3 ENUMservice field

5.4.3.3.1 Introduction

The ENUMservice field appears in the NAPTR records for a particular E.164 number. It describes the services supported by that number. See section **Error! Reference source not found.** for an example. The following are recommended values to be used for different services.

5.4.3.3.2 SIP/IMS

The ENUMservice to be used for IMS is “E2U+SIP” as specified in IETF RFC 3764 [33].

5.4.3.3.3 SIP-I/Packet Voice Interconnect

The ENUMservice to be used for SIP-I/Packet Voice Interconnect is "E2U+PSTN:SIP" as specified in IETF RFC 4769 [43].

5.4.3.3.4 MMS

The ENUMservice to be used for MMS is “E2U+MMS:mailto” as specified in IETF RFC 4355 [34].

It should be noted that this ENUMservice used to be "mms+E2U". However, use of this ENUMservice field value is now deprecated and should no longer be used. For more information see 3GPP TS 23.140 [15].

5.4.3.3.5 Other services

The value for the ENUMservice field to be used for any other service that uses the GSMA Carrier ENUM service should seek to reuse those values that have been reserved with IANA as detailed in the List of ENUMservice Registrations [32]. Private/non standardised ENUMservice field values should be avoided and instead, registration with IANA should be sought (as per the IANA registration process defined in IETF RFC 3761 [3]).

5.4.3.4 Example NAPTR RR

The following shows an example of the E.164 number +447700900123 that supports SIP/IMS, SIP-I/Packet Voice Interworking and MMS, in a Service Provider's network with E.212 number range of MNC 01 and MCC 234 allocated to it. Note that the $ORIGIN statement is used here to ensure correct syntax and would have limited use in a large scale, live DNS.

```
$ORIGIN 0.0.7.7.4.4.e164enum.net.
     3.2.1.0.0.9 NAPTR 100 10 "u" "E2U+SIP"
                    "!^.*$!sip:+447700900123@ims.mnc001.mcc234.3gppnetwork.org;user=phone!" .
                 NAPTR 100 10 "u" "E2U+PSTN:SIP"
                       "!^.*$!sip:+447700900123@sip-i.mnc001.mcc234.3gppnetwork.org!" .
                 NAPTR 100 10 "u" "E2U+MMS:mailto"
                       "!^.*$!mailto:+447700900123/TYPE=PLMN@mnc001.mcc234.3gppnetwork.org!" .
```

The querying application asks the DNS for all the NAPTR records for a given E.164 number. There may be multiple NAPTR records returned as in this example. The querying application then selects the NAPTR record(s) that contains the desired service(s), and discards the rest.

The "u" flag indicates the result of this lookup is a URI. The last part of the NAPTR is a Regular Expression and the querying application applies the Regular Expression to the query string (that is the E.164 number) to get the result.. In the example above the pattern of “^.*$” instructs the application to match all and any text from the start to the end of the query string (that is the E.164 number) and replace it with the following string delimited by the following two “!”, which contains a complete URI/URL.

As an alternative to including a complete URI/URL, many DNS/ENUM servers make use the input regular expression operator ("\1"). This instructs the querying application to insert the query string (that is the E.164 number used for the query) wherever it appears. This saves repeating of the E.164 number itself in the URI/URL.

```
$ORIGIN 0.0.7.7.4.4.e164enum.net.
     3.2.1.0.0.9 NAPTR 100 10 "u" "E2U+SIP"
                    "!^.*$!sip:\\1@ims.mnc001.mcc234.3gppnetwork.org;user=phone!" .
                 NAPTR 100 10 "u" "E2U+PSTN:SIP"
                    "!^.*$!sip:\\1@sip-i.mnc001.mcc234.3gppnetwork.org!" .
                 NAPTR 100 10 "u" "E2U+MMS:mailto"
                    "!^.*$!mailto:\\1/TYPE=PLMN@mnc001.mcc234.3gppnetwork.org!" .
```

Here the pattern “^.*$” once again instructs the application to match all and any text from the start to the end of the query string (that is the E.164 number) and replace it with the following string delimited by the following two “!”, which now contains “\\1” (there are two "\" here to prevent the operator being applied too early) instructing the querying application to insert the query string (that is the E.164 number). The resulting URIs/URLs returned by these regular expressions evaluate to the same as in the first example.

6 Processes and Procedures relating to DNS

6.1 Introduction

This section describes the processes and procedures relating to DNS that apply to Service Providers and GRX/IPX Providers.

6.2 Existing domains/sub-domains on the GRX/IPX network and their Allocation

The domain names for use by Service Providers on the GRX/IPX network are the following:

- .gprs
- .3gppnetwork.org
- .ipxsp.org
- .e164enum.net

Only the sub-domains listed in section **Error! Reference source not found.** for each of the above domains should be used.

The domain name ".e164enum.net" is used only for Carrier ENUM on the GRX/IPX; see section **Error! Reference source not found.** for more information.

The domain names for use by GRX/IPX Providers on the GRX/IPX are the same as those above, when a GRX/IPX Provider is hosting services on behalf of a Service Provider. For all other services and also for GRX/IPX network equipment (for example routers, MMS Hubs, etc.), it is recommended to use ipxnetwork.org, see section 2.3.3. The ".grx" domain name also is commonly used, but should be reserved for legacy equipment on the GRX network. The sub-domains on “.grx” and “ipxnetwork.org” are agreed amongst other GRX/IPX Providers and assigned on a first come – first served basis in order to guarantee uniqueness (a good place to discuss this with other GRX/IPX Providers is the GRX Working Party).

6.3 Procedures relating to new domain names on the GRX/IPX network

New domain names may be added to the GRX/IPX network's DNS by any Service Provider or GRX/IPX Provider, in order to enable further services to be used on the NNI provided by the GRX/IPX network. This could be to allow such things as resolution of domain names used for national interconnect agreements, and so on. However, wherever possible, the existing sub-domains of the domain names specified in section **Error! Reference source not found.** should be reused.

It is recommended that new domain names to be added to the GRX/IPX network's DNS are:

- a sub-domain of a Country Code Top Level Domain (ccTLD);
- registered/reserved on the Internet, in order to prevent any issues of ownership;
- not provisioned on the Internet (that is. not resolvable, at least no more than is absolutely necessary for example to retain ownership as per the rules of some ccTLD authorities);
- hosted in their own authoritative DNS server(s) on the GRX/IPX network, which is linked from the GRX/IPX Root DNS that is by using NS record entries (this eases administration of the new domain name and also prevents the GRX/IPX Root DNS becoming unmanageable); and
- used by an entity in addition to either their "mnc<MNC>.mcc<MCC>.3gppnetwork.org" domain name or "spn<SPN>.ipxsp.org" domain name, as specified in section **Error! Reference source not found.** (amongst other things, this enables network node naming as per section **Error! Reference source not found.**).

The hosting authoritative DNS server(s) need to be reachable and respond to queries from all Service Providers and/or GRX/IPX Providers that need to resolve associated FQDNs. Ideally, access should be allowed to all entities on the GRX/IPX network, but only those who need to should have their queries properly serviced; the rest should be returned a standard DNS or ICMP error.

Care should be taken to not inadvertently force another entity who is denied access/resolvability of the domain name into (automatically or otherwise) trying to resolve it, including (but not necessarily limited to):

- by using only the new domain name in general network node naming (network node naming should still be done as per section **Error! Reference source not found.**, using the domain names recommended therein); and
- by returning it in a NAPTR and/or SRV record (for example as used in IMS/SIP, ENUM, EPC).

For domain names that need to be resolvable on the UNI, the Internet DNS should always be used. By design, the GRX/IPX DNS provides resolution only for entities connected to the NNI.

6.4 Description of the Master Root DNS service and modality of access

6.4.1 Master Root DNS services

The Master Root DNS provides authoritative naming management and address resolution mechanisms for the GSMA community that includes GRX Providers, IPX Providers and Mobile Network Operators. This translates into two main functions:

- Assignment and administration of domain names according to IR67 specification
- DNS zone transfer and query resolution services

The Root DNS is currently available at three peering locations (Amsterdam in the Netherland, Singapore and Ashburn in the United States). Additional locations can be added as necessary.

6.4.2 How to access Master Root DNS services

For an entity (GRX/IPX Provider or Mobile Network Operator) to connect to the Root DNS and access its services it is required to first register and become a “participant”. The registration involves a light accreditation process to verify the identity the entities connecting to system and the intended use of the services.

The accreditation process is simple and usually requires five working days. As part of the accreditation process the entity is required to fill in a form called the “participating agreement”. The participating agreements contains the terms and conditions for the use of the service and some basic information of the applying entity such company name, technical and administrative contract, GRX/IPX peering points.

Once it has been completed the form is sent to the Master Root DNS operator (Neustar) that is responsible to check and verify the information provided using appropriate sources including the IR21 database. If the verification is passed a contract is sent to the applying entity to be signed. If information is missing or incorrect the applying entity is required to resubmit the participating agreement.

If an application request is either controversial or unsuccessful, it is escalated to GSMA staff for their consideration and their final decision. The applying entity can appeal against a rejection by contacting the GRX/IPX chair.

Once the accreditation process has been completed and the contract has been signed, the Root DNS customer is activated. As part of the activation process a customer account is created in the system and a secureID Token is send to the “participant” with password activation to allow the customer access the system through a secure web portal interface over the Internet. The peering between the customer and the Root DNS is established and tested. As final step of the activation process the customer’s name servers are provisioned in the Master Root DNS system.

Once the activation process is completed the customer can start provisioning information in the Root DNS through the web portal. The customer then can create, delete, modify and transfer domain names on behalf of Mobile Operators and its other customers according to the rules defined in IR67.

For any administrative, technical and operation issue regarding the service, including the form required for the accreditation process, please contact gsma_root_dns@gsma.com.

6.5 Delegation of sub-domains of “pub.3gppnetwork.org”

GSMA can delegate a sub-domain of pub.3gppnetwork.org to DNS of an MNO. The routine specified by GSMA operations, that the MNO needs follow to do this, consists of the following steps:

1. **Identify MCC and MNC values** for the MNO.

2. **Identify CNAME record** for the domain to be transferred**.**

   The CNAME record shall be in format of:
   <ABC>.mnc<MNC>.mcc<MCC>.pub.3gppnetwork.org

where

acceptable values of <ABC> are defined in 2.3.4 (other values might be added as needed; see also NOTE 2 below)

<MNC> and <MCC> have to be replaced by respective values of the home network in decimal format, with a 2-digit MNC padded out to 3 digits by inserting a 0 at the beginning.

NOTE 1: For RCS configuration server CNAME record should be in format of http://config.rcs.mnc<MNC>.mcc<MCC>.pub.3gppnetwork.org

NOTE 2: An operator may wish to delegate the entire mnc<MNC>.mcc<MCC>.pub.3gppnetwork.org sub-domain.

3. **Create the Zone File** on the MNO's own NameServer/DNS with the CNAME record specified in step 2.

4. **Complete the Request Form** in Annex D.1 and - if required for your use of the sub-domain - **also the Letter of Authorization** in Appendix D.2, and send both to GSMA at 3gppnetwork.org_delegation@gsma.com

NOTE 3: the Letter of Authorization format (Annex D.2) may need to be adapted dependent on your selected Certificate Body's requirements. If in doubt, please contact a Certificate Body of your choice, and obtain a necessary template to be filled in by MNO and signed by GSMA as the registrant of 3gppnetwork.org domain.

5. **GSMA will process the request, delegate the requested subdomain to MNO's DNS, and return a signed copy of the Letter of Authorization to MNO**.

NOTE 4: the typical maximum lead time to process the Request Form and sign the Letter is five (5) working days.

NOTE 5: the requesting MNO is responsible for submitting the Letter to their Certificate Authority.

Annex A Sample BIND DNS Configuration for GPRS

A.1 Introduction

All sample configurations of this annex are in valid syntactical format for the ISC BIND DNS server software. However, the samples are not from actual DNS configuration and contain only example information, including sample IP addresses which are not valid. They are provided for illustration purposes only. It is therefore highly recommended NOT to use these samples in live networks! The GSM Association takes no responsibility of the usage of these configurations in any operators DNS servers and/or live networks.

A.2 The "named.conf" file

The "named.conf" file has configuration information for BIND software. Following is only the necessary configuration to get DNS running. There are many more options that may also be useful, but which are not shown here, simply for making the examples as simple as possible.

A.2.1 The "named.conf" file for a PLMN Master Nameserver

```
options {
      directory "/var/named";
};    // where the files reside
zone "." in {
      type hint;
      file "gprs.hint";
};    // gprs root servers
zone "0.0.127.in-addr.arpa" in {
      type master;
      notify no;
      file "master/0.0.127.in-addr.arpa";
};    // only contains information about localhost.
/*
*     PLMN domain information
*/
zone "mnc091.mcc244.gprs" in {
      type master;
      file "master/mnc091.mcc244.gprs";
};
zone "sonera.fi.gprs" in {
      type master;
      file "master/sonera.fi.gprs";
};    // human readable operator id
zone "168.192.in-addr.arpa" in {
      type master;
      file "master/168.192.in-addr.arpa";
};
```

A.2.2 The "named.conf" file for a PLMN Slave Nameserver

```
options {
      directory "/var/named";
};    // where the files reside
zone "." in {
      type hint;
      file "gprs.hint";
};    // gprs root servers
zone "0.0.127.in-addr.arpa" in {
      type master;
      notify no;
      file "master/0.0.127.in-addr.arpa";
};    // only contains information about localhost.
/*
*     PLMN domain information
*/
zone "mnc091.mcc244.gprs" in {
      type slave;
      file "slave/mnc091.mcc244.gprs";
      masters {192.168.1.2;}  // address of master nameserver
};
zone "sonera.fi.gprs" in {
      type master;
      file "slave/sonera.fi.gprs";
      masters {192.168.1.2;}  // address of master nameserver
};    // human readable operator id;
zone "168.192.in-addr.arpa" in {
      type slave;
      file "slave/168.192.in-addr.arpa";
      masters {192.168.1.2;}  // address of master nameserver
};
```

A.3 Zone Configuration Files

Recommended values for SOA records are as specified in ripe-203.

A.3.1 The "gprs.hint" file

This file contains ".gprs" root nameservers needed to initialise cache of ".gprs" nameservers. Note that the “.” character is indeed significant.

```
.     518400            IN    NS    dns0.root.gprs.
      dns0.root.gprs.   IN    A     172.22.1.5
.     518400            IN    NS    dns1.root.gprs.
      dns1.root.gprs.   IN    A     10.254.243.7
.     518400            IN    NS    dns2.root.gprs.
      dns2.root.gprs.   IN    A     192.168.17.232
```

A.3.2 The "0.0.127.in-addr.arpa" file

This file contains only information about localhost i.e. 127.0.0.1

```
$TTL 172800
@     IN    SOA         localhost.. hostmaster.localhost. (
            2000030701  ; serial (YYYYMMDDvv)
            86400       ; refresh (24 hours)
            7200        ; retry (2 hours)
            3600000     ; expire (1000 hours)
            172800 )    ; minimum time to live (2 days)
1     IN    PTR         localhost.
```

A.3.3 PLMN zone files

PLMN may configure both mnc.mcc.gprs and operaror.cc.gprs type domains that will share exactly the same host information. In addition, early versions of GTPv0 did not have leading zeroes to make mnc code always 3 digits long. In order to minimise both configuration work and possible errors, zone files may include a common host configuration.

A.3.3.1 The "mnc091.mcc244.gprs" file

```
$TTL 172800
@     IN    SOA   mnc091.mcc244.gprs. hostmaster.mnc091.mcc244.gprs. (
            2000030701  ; serial (YYYYMMDDvv)
            86000       ; refresh (24 hours)
            7200        ; retry (2 hours)
            3600000     ; expire (1000 hours)
            172800 )    ; minimum time to live (2 days)
      IN    NS    dns0
      IN    NS    dns1
$INCLUDE master/hosts
```

A.3.3.2 The "sonera.fi.gprs" file

```
$TTL 172800
@     IN    SOA   sonera.fi.gprs. hostmaster.sonera.fi.gprs. (
            2000030701  ; serial (YYYYMMDDvv)
            86400       ; refresh (24 hours)
            7200        ; retry (2 hours)
            3600000     ; expire (1000 hours)
            172800 )    ; minimum time to live (2 days)
      IN    NS    dns0
      IN    NS    dns1
$INCLUDE master/hosts
```

A.3.4 The "hosts" file

This file contains IP address records for all hosts in the PLMN. The origin changes depending on which file includes the contents i.e. after the names not ending at dot, the current domain name is appended automatically.

Load balancing may be performed configuring same access point with several IP addresses that actually are on different GGSNs. In this case, addresses are used in round-robin

fashion. However, DNS information is cached and a new query is performed only when the TTL (time-to-live) has expired. Therefore TTL of 0 seconds is configured for load balanced access points.

```
dns0                        IN    A     192.168.1.2
dns1                        IN    A     192.168.2.2
;
;     router
helsinki-rtr-1-fe-0-0       IN    A     192.168.1.254
helsinki- rtr-1-fe-0-1      IN    A     192.168.2.254
helsinki- rtr-1-fe-0-2      IN    A     192.168.3.254
helsinki- rtr-1-s-1-0       IN    A     172.22.5.6
;
;     access point
ibm.com                     IN    A     192.168.1.5
;
;     load balanced access point
compaq.com            0     IN    A     192.168.1.5
                      0     IN    A     192.168.2.5
;
;     service access point
internet                    IN    A     192.168.2.2
;
;     GGSN
helsinki-ggsn-15            IN    A     192.168.1.5
helsinki- ggsn-25           IN    A     192.168.2.5
helsinki- ggsn-22           IN    A     192.168.2.2
;
;     SGSN
helsinki-sgsn-1             IN    A     192.168.3.3
;     SGSN with RAI
racF1.lac12EF               IN    A     192.168.3.3
```

A.3.5 The "168.192.in-addr.arpa" file

There may be several PTR records so that each name associated with and address may have reverse mapping also. Note that IP address is reversed in in-addr.arpa domain i.e. 192.168.1.254 will be 254.1.168.192.in-addr.arpa.

```
$TTL 172800
@     IN    SOA   dns0.sonera.fi.gprs. hostmaster.sonera.fi.gprs. (
            2000030701  ; serial (YYYYMMDDvv)
            86400       ; refresh (24 hours)
            7200        ; retry (2 hours)
            3600000     ; expire (1000 hours)
            172800 )    ; minimum time to live (2 days)
      IN    NS    dns0.sonera.fi.gprs.
      IN    NS    dns1.sonera.fi.gprs.
5.1   IN    PTR   ibm.com.sonera.fi.gprs.
            PTR   ibm.com.mnc091.mcc244.gprs.
            PTR   compaq.com.sonera.fi.gprs.
            PTR   compaq.com.mnc091.mcc244.gprs.
            PTR   helsinki-ggsn-15.sonera.fi.gprs.
            PTR   helsinki- ggsn-15.mnc091.mcc244.gprs.
254.1 IN    PTR   helsinki-rtr-1-fe-0-0.sonera.fi.gprs.
            PTR   helsinki- rtr-1-fe-0-0.mnc091.mcc244.gprs.
2.2   IN    PTR   internet.sonera.fi.gprs.
            PTR   internet.mnc091.mcc244.gprs.
            PTR   helsinki-ggsn-2.sonera.fi.gprs.
            PTR   helsinki- ggsn-2.mnc091.mcc244.gprs.
5.2   IN    PTR   compaq.com.sonera.fi.gprs.
            PTR   compaq.com.mnc091.mcc244.gprs.
            PTR   helsinki-ggsn-25.sonera.fi.gprs.
            PTR   helsinki-ggsn-25.mnc091.mcc244.gprs.
254.2 IN    PTR   helsinki-rtr-1-fe-0-1.sonera.fi.gprs.
            PTR   helsinki-rtr-1-fe-0-1.mnc091.mcc244.gprs.
3.3   IN    PTR   helsinki-sgsn-1-fe.sonera.fi.gprs.
            PTR   helsinki-sgsn-1-fe.mnc091.mcc244.gprs.
            PTR   racF1.lac12EF.sonera.fi.gprs.
            PTR   racF1.lac12EF.mnc091.mcc244.gprs.
254.3 IN    PTR   helsinki-rtr-1-fe-0-2.sonera.fi.gprs.
            PTR   helsinki-rtr-1-fe-0-2.mnc091.mcc244.gprs.
```

Annex B Alternative ENUM Architecture: Multiple Root Model

B.1 Introduction

This Annex describes an alternative to the preferred ENUM architecture model described in section **Error! Reference source not found.**. As per the preferred ENUM architecture model, the following model utilises the technical requirements as detailed in section **Error! Reference source not found.**, allowing full interoperability between Service Provider and different ENUM Service Providers (ESPs).

In this architecture model, a common root DNS server is not utilised. Instead, the root node functionality along with the ENUM Tier 0 and possibly also the Tier 1 are provisioned by an authoritative database either within the operator's network or outside the operator's network via a service bureau. In essence, this means that connection to the GRX/IPX Carrier ENUM is not a requirement, although, the GRX/IPX may be used to interconnect the end user service. It also means that an operator implementing this option does not necessarily have to wait for roll out of an ENUM Tier 1 server for the destination operator.

Operators who implement this option need to also apply a policy to the derived URI, as discussed in section **Error! Reference source not found.**, to avoid late session-establishment-failure or even worse, session-connection-timeout for their subscribers.

B.2 Architecture

The architecture for this model has many Authoritative Database provisioning options. This means that Service Providers have flexibility and may choose how to provision their ENUM databases depending on their network and market or regulatory environment. This has an advantage in that it allows Service Providers to choose the best option for their environment, based on such factors as local numbering policy, number portability solution, etc.

What remains the same though is that the Tier-2 server for the destination operator is identified.

The architecture for this model is depicted in the following figure:

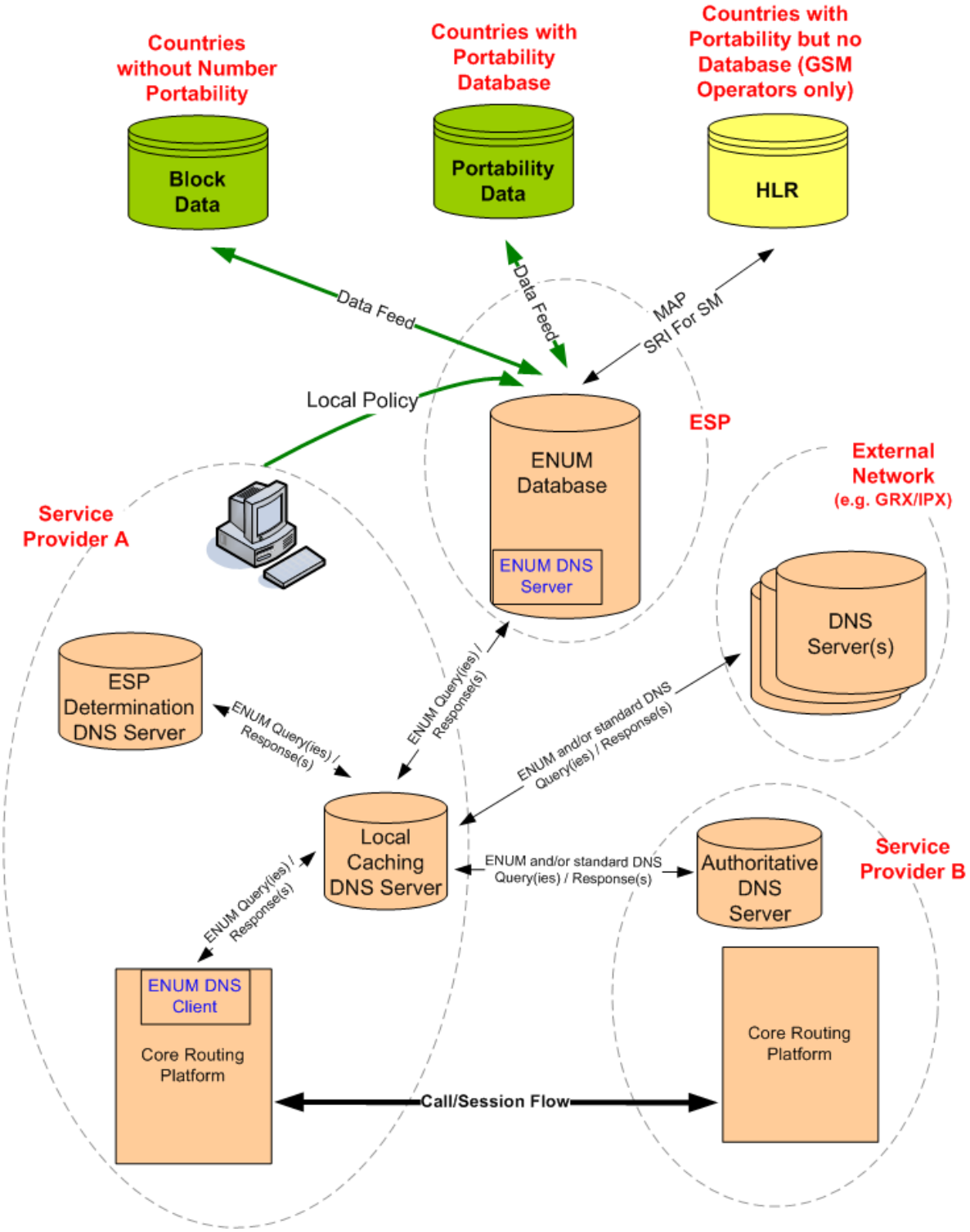

Figure 15: Architecture for the Multiple Root Model

It is an implementation option as to when a Service Provider provisions their own ENUM Server or utilises an ENUM Server in an ESP for destination numbers.

ENUM requests to an external network (e.g. GRX/IPX) and consequently to an authoritative DNS server in Service Provider B, is optional and occurs only when the ENUM Server does not return a final answer.

The ESP Determination DNS Server is used by the Service Provider to utilise multiple ENUM Servers (residing in their own network and/or in one or more ESPs) or, one or more ENUM Servers and the Single Root architecture model (further specification on interworking between the two architectural models is FFS in a future version of the present document). The Local Caching DNS Server needs to be preconfigured to forward DNS requests for domains ending in "e164enum.net" to the ESP Determination DNS Server. Alternatively, the two nodes/features can be provisioned on the same platform.

As shown above, there are three different implementation models that leverage existing industry sources of number-assignment data:

- ***Number portability database***: ENUM server or ESP utilizes an existing authoritative number portability database to determine the destination carrier for a given dialled number. The operator originating the query uses local policy information to provision an appropriate entry-point address for each of its interconnect partners as shown below.
- ***Number-block database***: ENUM server or ESP utilizes an existing authoritative number-block assignment database to determine the destination carrier for a given dialled number. This model works in any country that does not support number-portability.
- ***MAP SRI for SM query***: ENUM server or ESP utilizes existing HLR databases to discover the destination carrier for GSM networks around the world.

B.3 Resolution

The address resolution process in this model breaks down into the following logical steps:

Identify the ESP to use (given the dialled number);
- Identify the Subscribed Network (using the determined ESP).

Local policy should be applied either at the ESP or in the Service Provider network, as detailed in section **Error! Reference source not found.**.

The following figure depicts an example ENUM resolution for this model, after the Core Routing Platform has sent the necessary ENUM query to its local caching DNS server:

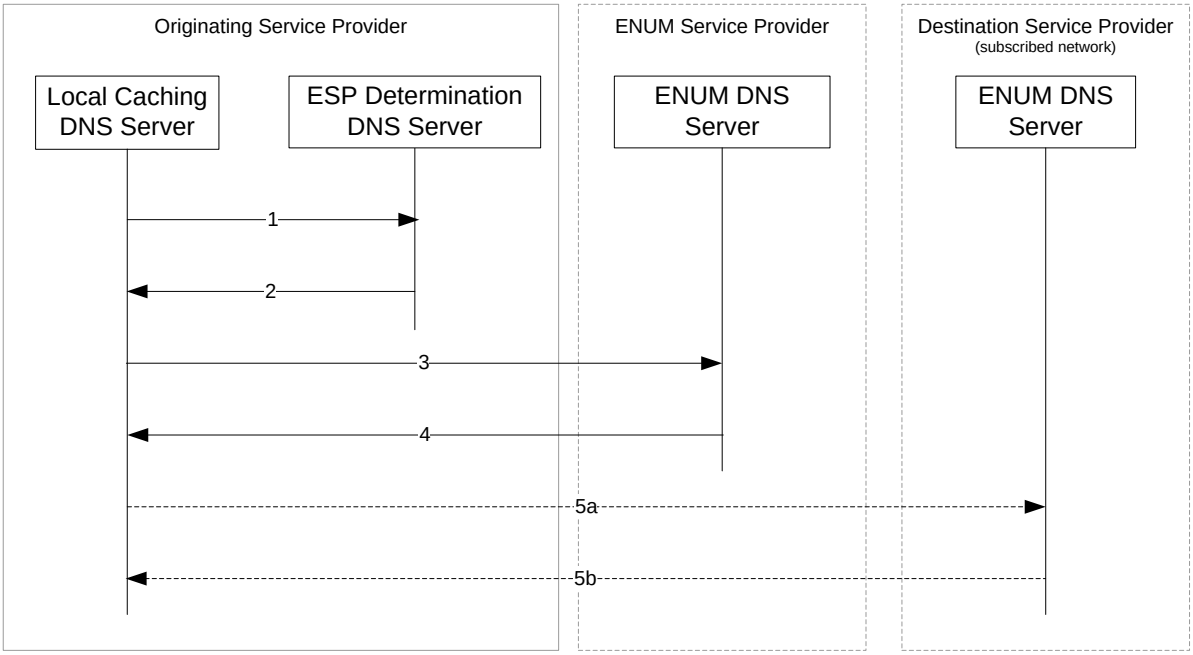

Figure 16: Example ENUM resolution in the Multiple Root Model

The numbers in the messages in the above figure refer to the below:

1. Service Provider's Local Caching DNS Server sends the DNS query to its own ESP Determination DNS Server (which is essentially a DNS server that is authoritative for "e164enum.net").
2. ESP Determination DNS Server analyses the queried ENUM FQDN. It then replies with the NS record for the Service Provider's chosen ESP for that domain (based on pre-configuration).
3. Service Provider re-sends the DNS query, but to the Special ENUM DNS Server in the ESP.
4. The ESP looks-up the E.164 number by using connections to existing ENUM servers, referencing number block data, querying (M)NP databases and/or by issuing a MAP_SRI_For_SM to the target network's HLR. It then replies with a list of URIs/URLs associated with the given E.164 number in NAPTR records, or the NS record(s) of the subscribed network's authoritative DNS server.
5. If the ESP replied with (an) NS record(s), then:
    - a) The Service Provider re-sends the query, but to the subscribed network's authoritative DNS server.
    - b) The subscribed network replies with a list of URIs/URLs associated with the given E.164 number in NAPTR records.

NOTE: As per normal DNS procedures, each reply a Service Provider receives is cached for a certain amount of time, therefore, negating the need of every message shown always having to be sent.

B.4 Access to ENUM Servers

In this model, the ENUM Service Provider takes care of all commercial agreements and any charges incurred for access to the sources of its back-end data used to service queries from Service Providers. The Service Provider typically will have a commercial agreement with an ENUM Service Provider (of which may include charges). Access to Service Provider Tier-2 servers is still required though.

B.5 Interworking with the preferred model

Service Providers who utilise this model still have to provide ENUM DNS Tier-1 and Tier-2 servers to enable other Service Providers utilising the preferred model (as described in sub-clause 5.3) to be able to resolve their queries. Such provisioning is implementation dependent, and no recommendations are made in the present document.

Annex C Solving Number Portability in ENUM

C.1 Introduction

This section describes and analyses different approaches for provisioning ENUM in countries where Number Portability exists. The approach used will depend on the Number Portability solution used in the local county for the hosted number ranges.

The different approaches can be categorized based on at which Tier the knowledge about ported users is available. At a centralized Tier-1 ENUM DNS server or decentralized at the Tier-2 ENUM DNS servers

C.2 Options based on number portability knowledge at a central ENUM server

C.2.1 Option 1 – Central authoritative database

C.2.1.1 Description

This option consists of combining the Tier-1 and Tier-2 ENUM tiers and having the country level ENUM DNS server authoritative for all subscribers. This means that all URIs and/or URLs for subscribers are centrally located and managed.

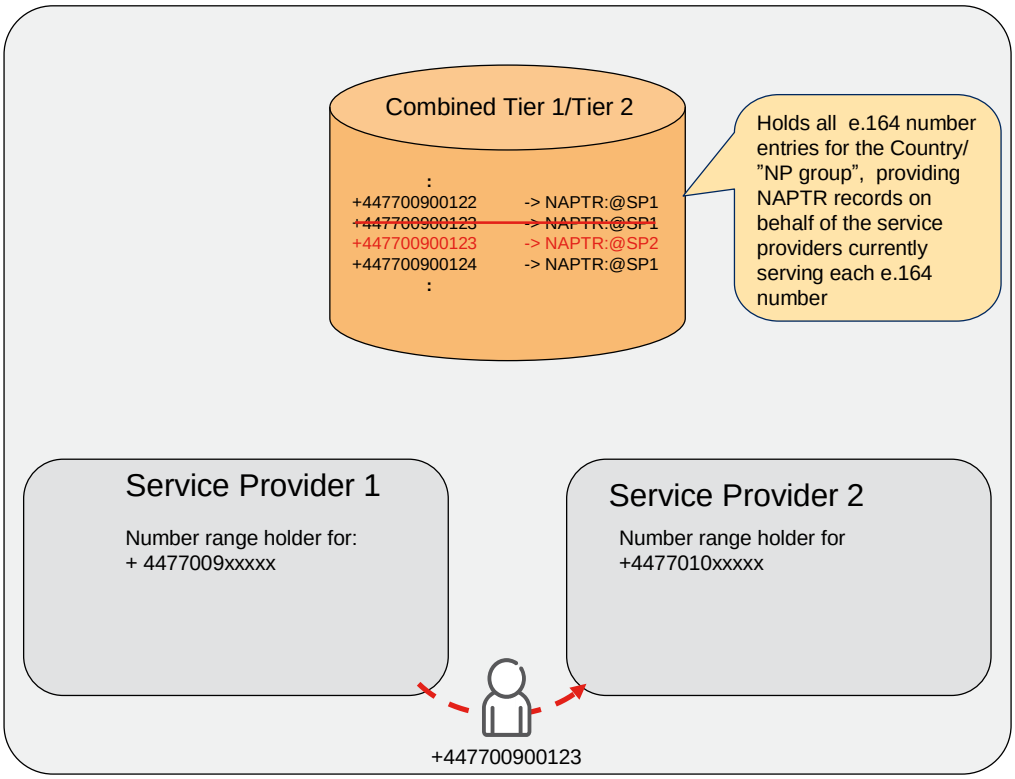

Figure 17: Central Authoritative database

C.2.1.2 Example Configuration

If the subscriber whose E.164 number is +44-7700-900123 is a subscriber of Service Provider 1 in the UK, his SIP URI (for IMS) could be "SIP:+447700900123@ims.mnc001.mcc234.3gppnetwork.org;user=phone" and would be provisioned in his ENUM record in the central database as follows:

```
$ORIGIN 0.0.7.7.4.4.e164enum.net.
       3.2.1.0.0.9 NAPTR 10 10 "u" "E2U+SIP"
       "!^.*$!sip:+447700900123@ims.mnc001.mcc234.3gppnetwork.org;user=phone!" .
```

If this subscriber then moved/ported over to Service Provider 2 in the UK, then this SIP URI in the central database would simply be modified to be "SIP:+447700900123@ims.mnc002.mcc234.3gppnetwork.org;user=phone" thus:

```
$ORIGIN 0.0.7.7.4.4.e164enum.net.
       3.2.1.0.0.9 NAPTR 10 10 "u" "E2U+SIP"
       "!^.*$!sip:+447700900123@ims.mnc002.mcc234.3gppnetwork.org;user=phone!" .
```

C.2.1.3 Advantages and Disadvantages

The obvious disadvantage of this option is that the data-fill for such a combined Tier-1/2 could be very large! The widely used, freely available ISC BIND DNS server application would more than likely not be able to cope with such a data-fill for this solution. However, there are high capacity ENUM/DNS solutions commercially available.

This option does have the advantage though that all subscriber numbers are stored centrally and so can be centrally controlled and administered, possibly by one O&M facility. It also has the advantage in that it reduces the number of DNS requests that an ENUM/DNS resolver has to perform by one DNS Request therefore the extra time taken to search through a larger set of zone files to return the NAPTR records may in some circumstances actually be quicker than the DNS resolver having to perform a further DNS look-up to a separate Tier-2.

C.2.1.4 Suitability

This option is possibly more suited to countries having a central ENUM Tier 1 server and where their MNPs are already realised using a central (M)NP database.

C.2.2 Option 2 – Central redirection database

C.2.2.1 Description

This option consists of combining the Tier-1 and Tier-2 ENUM tiers but instead of having the country level ENUM DNS server store the URIs and/or URLs for subscribers, each subscriber record contains a special redirection indicator for all incoming look-ups. The indicator provides a pointer to the subscribed network. This "capture all" redirection can be realised using a single NS record. This NS record redirects the ENUM/DNS Resolver to the newly subscribed network's ENUM/DNS server by returning a new DNS server to query. This means that all URIs and/or URLs for subscribers are located and managed by the actual subscribed network of each number, rather than the number range owning network of each number.

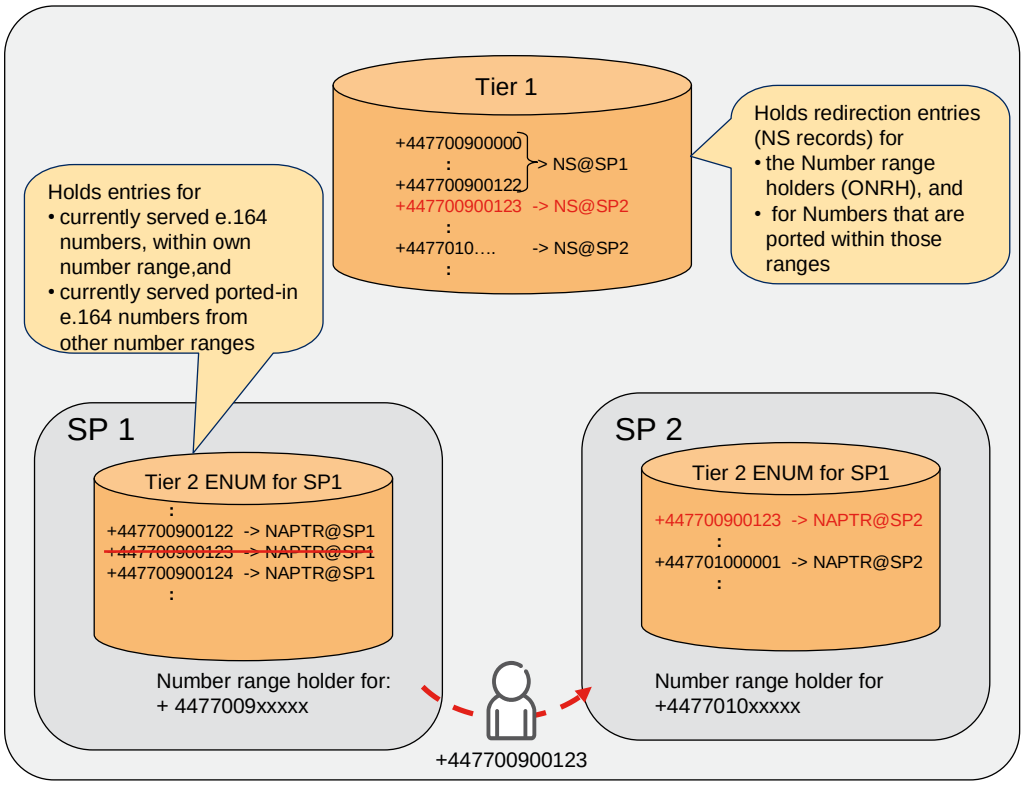

Figure 18: Central redirection database

C.2.2.2 Example

If the subscriber whose E.164 number is +44-7700-900123, and is also a subscriber of Service Provider 1 in the UK, his record in the Central Database would be as follows:

```
$ORIGIN 0.0.7.7.4.4.e164enum.net.
       3.2.1.0.0.9 IN NS dns1.mnc001.mcc234.3gppnetwork.org
```

And would be reflected in Service Provider 1's DNS server (called "dns1.mnc001.mcc234.3gppnetwork.org") as follows:

```
$ORIGIN 3.2.1.0.0.9.0.0.7.7.4.4.e164enum.net.
       NAPTR 10 10 "u" "E2U+SIP"
       "!^.*$!sip:+447700900123@ims.mnc001.mcc234.3gppnetwork.org;user=phone!" .
```

If this subscriber then moved over to Service Provider 2 in the UK, then the ENUM record stored in the Central Database would be modified to the following:

```
$ORIGIN 0.0.7.7.4.4.e164enum.net.
       3.2.1.0.0.9 IN NS dns1.mnc002.mcc234.3gppnetwork.org
```

And hence, Service Provider 2's DNS server (called "dns1.mnc002.mcc234.3gppnetwork.org") would be:

```
$ORIGIN 3.2.1.0.0.9.0.0.7.7.4.4.e164enum.net.
       NAPTR 10 10 "u" "E2U+SIP"
       "!^.*$!sip:+447700900123@ims.mnc002.mcc234.3gppnetwork.org;user=phone!" .
```

C.2.2.3 Advantages and Disadvantages

The main advantage of this option is that it puts the subscribed operator in full control of the URIs/URLs returned for a particular Tel URI. An explicit advantage over option 3 is that the newly subscribed network is *not* reliant upon the number range owning network to make any updates in their ENUM DNS server, only the Tier-1.

An explicit disadvantage over option 1 though is that the DNS Resolver may have to perform either one additional ENUM DNS look-up to the Tier-2 ENUM DNS server.

As for option 1, the obvious disadvantage of this option is that the data-fill for the Tier-1 could be very large! The widely used, freely available ISC BIND DNS server application would more than likely not be able to cope with such a data-fill for this solution. However, there are high capacity ENUM/DNS solutions commercially available.

C.2.2.4 Suitability

This option is possibly more suited to countries having a central ENUM Tier 1 server and where their MNP is already realised using a central MNP database.

C.3 Options based on number portability knowledge at Service Provider Tier-2 ENUM server

These options have in common that the Tier-1 ENUM/DNS server redirects to the Tier-2 ENUM/DNS of the Service Provider originally owning the number range.

A common disadvantage for these options compared to the centralized server options is that, to work properly, all Service Provider within an NP Group should have a Tier-2 ENUM DNS server.

Potential methods and measures to deal with the problem of not all Services Provider having an ENUM/DNS server are discussed in section **Error! Reference source not found.**.

An advantage with this option over the centralized server approaches is that is does not require a per country centralized server. In countries where there are problems to establish such a Tier-1 server, the decentralized options 3 to 6 described below can still be applied when the Tier-1 functionality to redirect to the number range owner's ENUM DNS server can be hosted on the Tier 0 server.

C.3.1 Option 3 – Change of domain name in URIs/URLs in Tier-2

C.3.1.1 Description

This option is similar to the previous one in that it consists of simply changing the domain name in all URIs and/or URLs under individual E.164 number entries to the identity of the newly subscribed network. However, the Tier-1 and Tier-2 are not combined but kept separate.

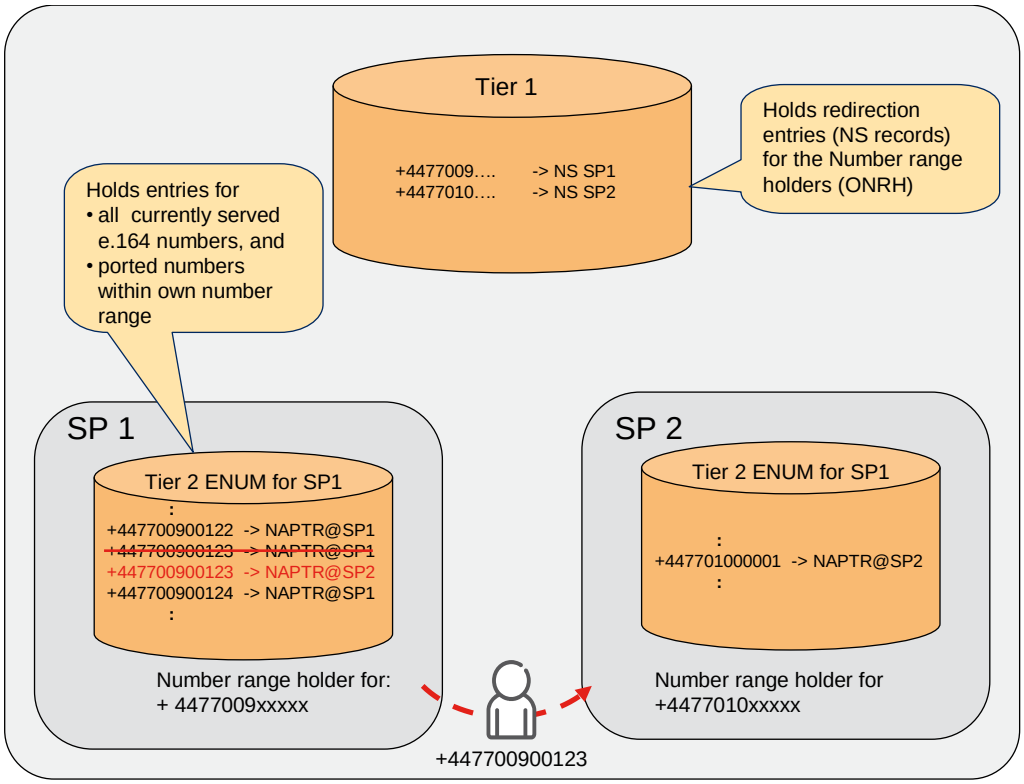

Figure 19: Change of Domain Names of URI/URLs in Tier-2

C.3.1.2 Example

If the subscriber whose E.164 number is +44-7700-900123 is a subscriber of Service Provider 1 in the UK, his SIP URI (for IMS) could be "SIP:+447700900123@ims.mnc001.mcc234.3gppnetwork.org" and would be provisioned in his ENUM record in Service Provider 1's Tier-2 DNS server as follows:

```
$ORIGIN 0.0.7.7.4.4.e164enum.net.
      3.2.1.0.0.9 NAPTR 10 10 "u" "E2U+SIP"
      "!^.*$!sip:+447700900123@ims.mnc001.mcc234.3gppnetwork.org!" .
```

If this subscriber then moved/ported over to Service Provider 2 in the UK, then this SIP URI would be modified in Service Provider 1's Tier-2 DNS server to be "SIP:+447700900123@ims.mnc002.mcc234.3gppnetwork.org" thus:

```
$ORIGIN 0.0.7.7.4.4.e164enum.net.
      3.2.1.0.0.9 NAPTR 10 10 "u" "E2U+SIP"
      "!^.*$!sip:+447700900123@ims.mnc002.mcc234.3gppnetwork.org!" .
```

C.3.1.3 Advantages and Disadvantages

A disadvantage of this option is that the newly subscribed network is reliant upon the number range owning network to not only make the changes at the time of porting, but to also support later additions and modifications to URIs and/or URLs; possibly relating to services that may not be offered by the number range owning network. For example, if

Service Provider 2 rolled-out an IP based service (that uses ENUM) before Service Provider 1, then Service Provider 1 would have to provision in their Tier-2 DNS all the ENUM records for those subscribers who have ported to Service Provider 2 with the new URI(s) and/or URL(s). Service Provider 1 may also not be able to do this in a time period that is satisfactory to Service Provider 2's launch of the new service.

C.3.1.4 Suitability

This option is suited to countries where their MNP is not realised using a central MNP database. It may also be suitable for countries having no central Tier-1 ENUM server, but where the Tier 1 functionality is hosted by the Tier-0.

C.3.2 Option 4 – Redirection at Tier-2

C.3.2.1 Description

This option consists of having a "normal" Tier-1 and Tier-2 however, the number range owning network's Tier-2 DNS server storing for each ported-out subscriber, a special redirection indicator for all incoming look-ups (effectively creating an extra "Tier-3" for all ported out subscribers). The indicator provides a pointer to the subscribed network. This "capture all" redirection is realised using a single NS record. This NS record redirects the ENUM/DNS Resolver to the newly subscribed network's ENUM/DNS server by returning a new DNS server to query.

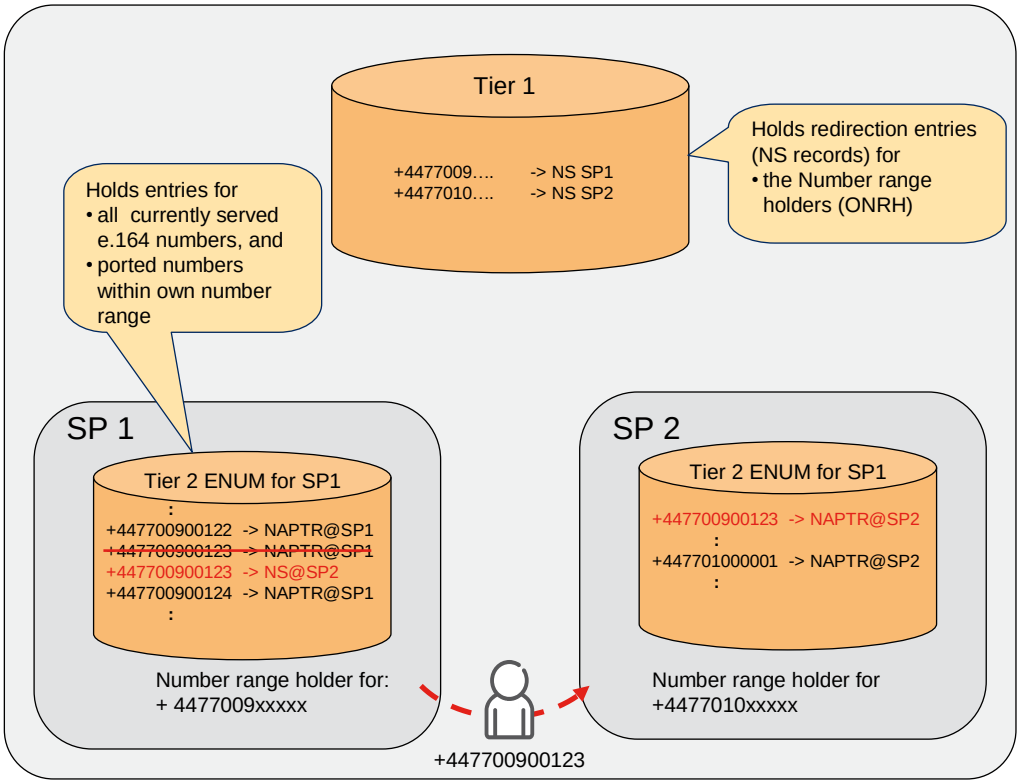

Figure 20: : Redirection at Tier-2

C.3.2.2 Example

If the subscriber whose E.164 number is +44-7700-900123 is a subscriber of Service Provider 1 in the UK, his SIP URI (for IMS) could be "SIP:+447700900123@ims.mnc001.mcc234.3gppnetwork.org" and would be reflected in his ENUM record as standard, thus:

```
$ORIGIN 0.0.7.7.4.4.e164enum.net.
      3.2.1.0.0.9 NAPTR 10 10 "u" "E2U+SIP"
      "!^.*$!sip:+447700900123@ims.mnc001.mcc234.3gppnetwork.org;user=phone!" .
```

If this subscriber then moved over to Service Provider 2 in the UK, then the ENUM record stored in Service Provider 1's Tier-2 DNS server would be something like the following:

```
$ORIGIN 0.0.7.7.4.4.e164enum.net.
      3.2.1.0.0.9 IN NS dns1.mnc002.mcc234.3gppnetwork.org
```

In Service Provider 2's DNS server, called "dns1.mnc002.mcc234.3gppnetwork.org", would be needed something like the following:

```
$ORIGIN 3.2.1.0.0.9.0.0.7.7.4.4.e164enum.net.
      NAPTR 10 10 "u" "E2U+SIP"
      "!^.*$!sip:+447700900123@ims.mnc002.mcc234.3gppnetwork.org;user=phone!" .
```

The DNS resolver will more than likely already "know" the IP address for the DNS server "dns1.mnc002.mcc234.3gppnetwork.org" due to previous look-ups. At the very least, it will know the authoritative server for the domain "3gppnetwork.org" from the current set of look-ups! This can be controlled further by increasing the said DNS Server's FQDN's TTL (which is achievable as today operators change the IP addresses of their DNS servers very infrequently). So in the common case, this solution will involve one extra DNS look-up, and in the worst case involve two extra DNS look-ups.

C.3.2.3 Advantages and Disadvantages

The main advantage of this option is that it puts the subscribed operator in full control of the URIs/URLs returned for a particular Tel URI, in the same manner as for option 2.

A disadvantage of this option is that the newly subscribed network is still reliant upon the number range owning network to make updates in their ENUM Tier-2 DNS server. However, unlike Option 3, the update is only minor, only has to be done once (or at least, only when the subscriber changes/ports networks) and encompasses *all* services relating to ENUM; whether they are supported by the number range owning network or not!

An explicit disadvantage over option 3 though is that the DNS Resolver may have to perform one additional ENUM DNS look-up to resolve ported numbers.

C.3.2.4 Suitability

As with Option 3, this option is more suited to countries where their MNPs are not realised using a central MNP database, and it is also suitable to countries where the Tier-1 functionality is hosted by the Tier 0.

C.3.3 Option 5 – Redirection at Tier-2 based on interaction with Legacy NP systems

C.3.3.1 Description

This option consists of having a "normal" Tier-1 and Tier-2. However for numbers where the Tier-2 servers do not have a corresponding ENUM record, the Tier-2 Interacts with a legacy Number Portability system and based on legacy NP information, it determines the currently serving Service Provider, and creates a NS response to redirect to that Service Provider. The legacy Number Portability information used to identify the serving Service Provider can for example be the IMSI, when available or SS7 routing information used by ISUP.

That information can be used to point to the appropriate NS record to use.

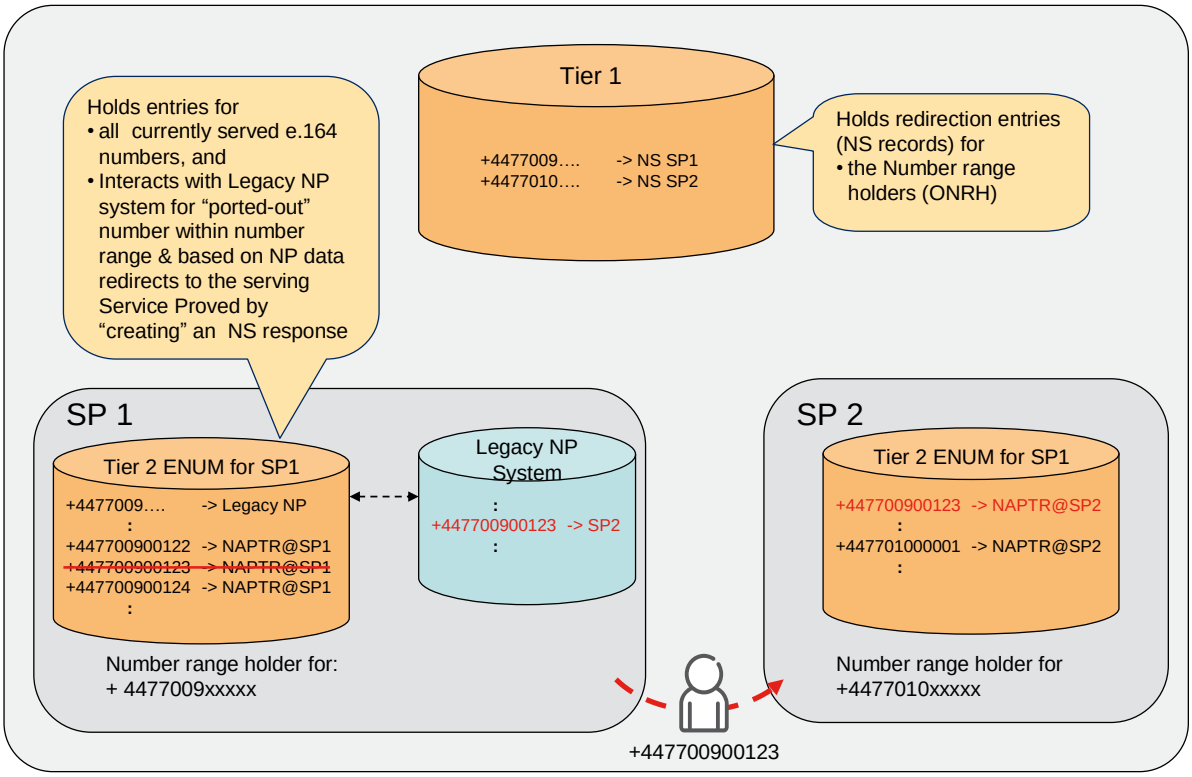

Figure 21: Redirection at Tier-2 based on Legacy NP system interaction

C.3.3.2 Example

If the subscriber whose E.164 number is +44-7700-900123 is a subscriber of Service Provider 1 in the UK, his SIP URI (for IMS) could be "SIP:+447700900123@ims.mnc001.mcc234.3gppnetwork.org" and would be provisioned in his ENUM record in Service Provider 1's Tier-2 DNS server as follows:

```
$ORIGIN 0.0.7.7.4.4.e164enum.net.
      3.2.1.0.0.9 NAPTR 10 10 "u" "E2U+SIP"
      "!^.*$!sip:+447700900123@ims.mnc001.mcc234.3gppnetwork.org;user=phone!" .
```

If this subscriber then moved over to Service Provider 2 in the UK, then the ENUM record stored in Service Provider 1's Tier 2 DNS server would be removed, and when a query for this number is received Service Provider 1's Tier-2 DNS server would interact with the Legacy NP system using for example an INAP or MAP query.

The response from the legacy NP system, informs that the number is now supported by Service Provider 2, and something like the following would be created.

```
$ ORIGIN 0.0.7.7.4.4.e164enum.net.
      3.2.1.0.0.9 IN NS dns1.mnc002.mcc234.3gppnetwork.org
```

In Service Provider 2's DNS server, called "dns1.mnc002.mcc234.3gppnetwork.org", would be needed something like the following:

```
$ORIGIN 0.0.7.7.4.4.e164enum.net.
      3.2.1.0.0.9 NAPTR 10 10 "u" "E2U+SIP"
      "!^.*$!sip:+447700900123@ims.mnc002.mcc234.3gppnetwork.org!" .
```

In Service Provider 2's DNS server, called "dns1.mnc002.mcc234.3gppnetwork.org", would be needed something like the following:

```
$ORIGIN 3.2.1.0.0.9.0.0.7.7.4.4.e164enum.net.
      NAPTR 10 10 "u" "E2U+SIP"
      "!^.*$!sip:+447700900123@ims.mnc002.mcc234.3gppnetwork.org;user=phone!" .
```

C.3.3.3 Advantages and Disadvantages

A disadvantage with this option is the need for interaction with the legacy NP system. At a minimum this interaction can be compared with performing an additional query in recursive mode.

Compared to alternative 4, this option does not require any updates to the number range owner’s ENUM/DNS server when a number is ported, more than that the E.164 entry for the ported number need to be removed from the Number range owning Service Provider’s Tier 2 server, and that information about how to translate the legacy number portability information to an NS record pointing to the other Service Provider’s ENUM DNS server need to be configured. However this need only to be introduced once, and not for every ported number.

The main advantage of this option is that it puts the subscribed operator in full control of the URIs/URLs returned for a particular Tel URI, in the same manner as for option 4. An explicit advantage over option 4 is that the newly subscribed network is *not* reliant upon the number range owning network to make any updates in their ENUM DNS server, as the newly subscribed network is identified from the Legacy NP system.

C.3.3.4 Suitability

This option is possibly more suited in for countries no Tier 1 server and the Tier-1 functionality is hosted by the Tier-1, and where all Service Providers have access to full Number Portability information,

C.3.4 Option 6 – Non-Authoritative response based on Legacy NP system interaction

C.3.4.1 Description

This option consists of having a "normal" Tier-1 and Tier-2. However for Numbers where the Tier-2 servers do not have a corresponding ENUM record, the Tier-2 may utilize legacy Number portability information and based on that information create a non-authoritative final response, where for example the legacy Number Portability routing information (for example IMSI or routing number, and so on) can be used to create a the domain name to be used in for example a SIP URI.

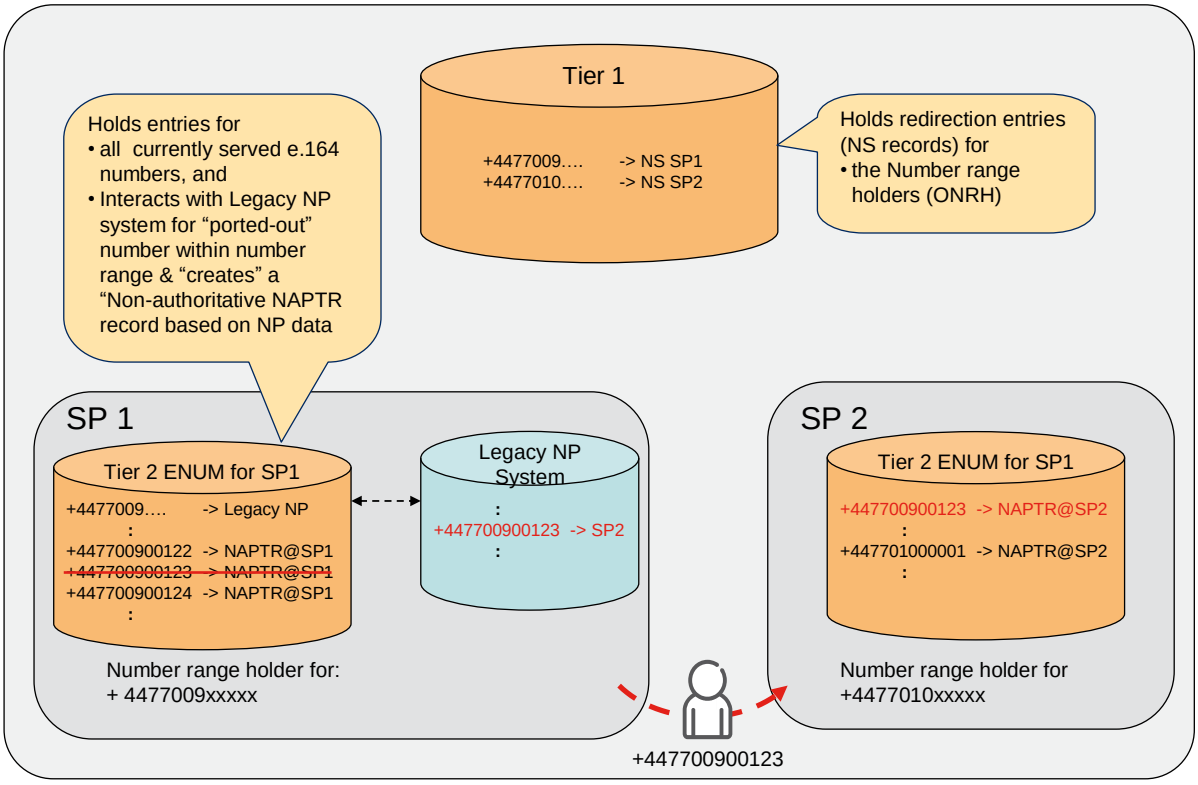

Figure 22: Non-authoritative NAPTR response based on Legacy NP system Interactions

C.3.4.2 Example

If the subscriber whose E.164 number is +44-7700-900123 is a subscriber of Service Provider 1 in the UK, his SIP URI (for IMS) could be "SIP:+447700900123@ims.mnc001.mcc234.3gppnetwork.org" and would be reflected in his ENUM record as standard, thus:

```
$ORIGIN 0.0.7.7.4.4.e164enum.net.
      3.2.1.0.0.9 NAPTR 10 10 "u" "E2U+SIP"
      "!^.*$!sip:+447700900123@ims.mnc001.mcc234.3gppnetwork.org;user=phone
!" .
```

If this subscriber then moved over to Service Provider 2 in the UK, then the ENUM record stored in Service Provider 1's Tier-2 DNS server would be removed, and when a query for this number is received Service Provider 1's Tier-2 DNS server would interact with the Legacy NP system using for example an INAP or MAP query.

The response from the legacy NP system, informs that the number is now supported by Service Provider 2, and something like the following would be created.

```
$ORIGIN 0.0.7.7.4.4.e164enum.net.
      3.2.1.0.0.9 NAPTR 10 10 "u" "E2U+SIP"
      "!^.*$!sip:+447700900123@ims.mnc002.mcc234.3gppnetwork.org;user=phone
!" .
```

The NAPTR RR record returned in this case may be considered as Non-authoritative as even if it provided based on consent by Service Provider 2, it is created based on legacy number portability information. In difference to Option 3, Service Provider 2 does not have the possibility to individualize the NAPTR records per E.164 number.

C.3.4.3 Advantages and Disadvantages

A disadvantage with this option is the need for interaction with the legacy NP system. At a minimum this interaction can be compared with performing an additional query in recursive mode.

Another important disadvantage is that the currently serving Service Provider cannot decide for which of his Ported-in numbers he wants a NAPTR Record returned. If the serving Service Provider only wants to populate his ENUM DNS server with for numbers having an IMS service, this information may not be available in the Legacy NP system, with the result the NAPTR records will be returned also for numbers that for example only are served on CS.

C.3.4.4 Suitability

This option is possibly more suited in for countries where no Tier 1 server and the Tier-1 functionality is hosted by the Tier-1, and where all Service Providers have access to full Number Portability information,

C.3.5 Considerations when not all Servicer provider have a Tier-2 ENUM DNS server

As mentioned, there may be problems with a decentralized Number portability solution if not all Service Providers have a Tier-2 ENUM DNS server.

In case one Service Provider does not have an ENUM/DNS server, there is no Tier-2 ENUM/DNS server that would hold NAPTR or NS records for the numbers that have been ported out to other Service Providers.

To allow a Service Provider who wants to be able to provide ENUM entries for all served E.164 number, including ported-in numbers when a decentralized solution is used, a number of methods that may help overcome the problem when not all Serve Providers have a Tier-2, as proposed below.

C.3.5.1 Hosting of Ported-in numbers at the Tier-1

Although the Options 3, 4, 5 and 6 are decentralized in nature, and the Tier-1 only should make redirects to the Number Range Holders, Service Providers make arrangement with the Tier-1 (or Tier-0 if it hosts the Tier-1 functionality) ENUM/DNS server to host entries for numbers ported in from a Service Provider not having a Tier-2 ENUM/DNS server.

This alternative can be used for all decentralized options.

C.3.5.2 Tier-1 redirects to alternative Service Provider Tier-2 server

For Options 5 and 6 which rely on information from Legacy NP systems, to determine the currently serving Service Provider, one or more of the Tier-2 Service Providers could agree to access the legacy NP system not only for his own Number ranges nut also for Number ranges held by a Service Provider not having an ENUM DNS server.

The Tier-1 (or Tier-0 for countries where the Tier-1 is hosted by the Tier-0 server) could then refer to the Alternative Servicer Provider’s ENUM/DNS server when the number range owner does not have a Tier-2.

If several or all Tier-2 Service Provider agree to do the same to share the cost and load, the Tier-1 server, can provide multiple NS records with the same priority, one for each of the “participating” Tier-2 Service Provider’s ENUM/DNS servers.

DNS resolvers could then randomize which “participating” Tier-2 Service Provider’s DNS server they would access to resolve the number.

Annex D Forms for transfer of sub-domain of “pub.3gppnetwork.org”

D.1 Request form

Request Form for Transfer of sub-domain of pub.3gppnetworks.org		
IT Contact at MNO	Organisation:	
	Title:	
	Name:	
	Email:	
	Mobile Number:	
MNO Information	MNO Name:	
	MCC Value:	
	MNC Value:	
CNAME record for MNO	*CNAME record for provisioning domain for an MNO shall follow the format: **<ABC>.mnc<MNC>.mcc<MCC>.pub.3gppnetwork.org** where <MNC>=mnc value of MNO, <MCC>=mcc value of MNO, both values padded to 3 digits with a leading "0" if it is 2-digit long.	___.mnc___.mcc___.pub.3gppnetwork.org
ZONE file for CNAME	Is Zone File for the identified CNAME record created **on MNO's DNS servers?**	YES / NO
DNS Server Details (IP Address & FQDN)	Please provide MNO's DNS server details, where the ZONE file for CNAME record had been created.	Name / IP Address
Letter of Authorization	Please fill in and email "Letter of Authorization for the transfer of the domain" document to **3gppnetwork.org_delegation@gsma.com**	
Requestee	Organisation:	
	Title:	
	Name:	
	Email Address:	
	Mobile Number:	
	Date:	
	Signature:	

D.2 Letter of Authorization Template

Please fill out all required fields in the template and replace <ABC>, <MNC> and <MCC> as specified in 6.5.

This letter can be adapted as per MNO’s selected Certificate Body’s requirement. The letter must be signed by GSMA.



<Certificate Organisation Name>

<Contact Name at Certificate Organisation>

<Certificate Organisation Address>

<Certificate Organisation Fax Number/Email address>

Date: <Please type date>

To whom it may concern,

Dear Sir/Madam,

Re: Domain Authorization Letter

I confirm that:

Organization enrolling for the Digital Certificate set out below is: <Please type your MNO's full company name here> ("Certificate Applicant")

Domain to be included in the certificate is:

<ABC>.mnc<MNC>.mcc<MCC>.pub.3gppnetwork.org ("Domain")

Registrant of the Domain is: GSM Association ("Registrant")

Digital Certificate is the certificate relating to the Domain.

I am employed by the Registrant and am duly authorized to sign this Domain Authorization Letter and to deal with all matters related to the registration of the Domain.

Certificate Applicant desires to install the Digital Certificate on its web server(s) for the domain and ultimately to enable secure communications with its users.

Registrant acknowledges that it has granted the Certificate Applicant the right to use the Domain as a common name in the Digital Certificate request referenced above and to otherwise use the Domain in connection with its business.

Regards,

Full Name: Javier sendin

Job Title: Technical Director

Organization: GSM Association

Signature:_____

Document Management

Document History

Version	Date	Brief Description of Change	Approval Authority	Editor / Company
0.1.0	14 October 2004	First draft – skeleton.	-	Nick Russell, Vodafone
0.2.0	10 May 2005	Second draft, with most sections filled in, or at least with place holders.	-	Nick Russell, Vodafone
0.2.1	11 May 2005	Changed the underlying Word template to the new one.	-	Nick Russell, Vodafone
0.3.0	15 November 2005	Enhancements of ENUM section, including addition of Number Portability in ENUM, plus minor corrections and update of template.	-	Nick Russell, Vodafone
0.9.0	16 December 2005	Final draft for publication; contains only minor corrections to formatting since previous version.	-	Nick Russell, Vodafone
1.0	16 December 2005	Approved for publication.	DAG	Nick Russell, Vodafone
1.1	26 January 2006	Minor formatting corrections.	IREG	Nick Russell, Vodafone
1.2	4 April 2006	Moved in the DNS information from IR.34, ENUM section updated with the agreements made in the ENUM adhoc, updated the list of domains to provide a list with those defined in and/or before 3GPP specification set Rel-6. This version of the present document is the first version to be classified as "Unrestricted".	IREG Packet	Nick Russell, Vodafone
1.3	9 August 2006	Clarification of references to 3GPP documents (to show which specific release is being referenced), addition of health warnings about the old MMS URI prefix and ENUMservice field values, addition of health warning about SIP URI provisioning and some general tidying-up/consolidation of text.	IREG Packet	Nick Russell, Vodafone
2.0	30 April 2007	Addition of the "No Root" ENUM architecture, plus some other miscellaneous corrections.	DAG	Nick Russell, Vodafone
2.1	18 October 2007	Minor restructuring to move ENUM material into own section, clarification in GPRS section and MMS section on using iterative rather than recursive DNS queries, clarification in MMS section of DNS usage when utilising one or more MMS Hubs and direct interconnects, and renaming of "No Root" ENUM model to "Multiple Root".	IREG Packet	Nick Russell, Vodafone

Version	Date	Brief Description of Change	Approval Authority	Editor / Company
2.2	14 April 2008	Addition of information on OMA's SUPL feature, including domain name used and a new section giving a brief overview of the feature (CR #10). Also, some minor corrections to the ENUM section are provided (CR #11). Finally, a global replacement of "MNO" to "Service Provider" has been done, in-line with IPX terminology.	IREG Packet	Nick Russell, Vodafone
3.0	26 September 2008	Includes new GSMA logo on coversheet, change of "Operators" to "Service Providers" in the spec title, and implementation of the following CRs: CR #12 (major): Implementation of the conclusion from the ENUM White Paper (EWP), plus other minor corrections/enhancements. This includes corrections to domain names in sub-sections of 5.7 CR #13 (minor): Addition of EPC and ICS specific sub-domains for .3gppnetwork.org. CR #14 (minor): Addition of new sub-section to ENUMservices section to specify the content of the ENUMservices field for services other than just those based on IMS/SIP and MMS. CR #15 (minor): Addition of information about domain names, including clearer indication of the current limitations of the GRX/IPX domain names currently supported. Some minor editorial, non-technical impacting corrections are also made.	DAG and IREG Packet	Nick Russell, Vodafone
3.1	8 December 2008	Corrections to footer, plus implementation of the following CRs: CR #16 (minor): Addition of the definition of the "user=phone" SIP URI parameter in URIs returned in IMS related ENUM responses. CR #17 (minor): Correction to 4.5.1 (IMS section) to state that support of NAPTR RRs are required in order to support SIP/IMS.	IREG Packet	Nick Russell, Vodafone
3.2	6 May 2009	Implementation of CR # 18 (minor): editorial enhancements to sections 1-4, and implementation of the recently approved sub-domains of 3gppnetwork.org (as requested by 3GPP and approved at Packet #37 and on email).	IREG Packet	Nick Russell, Vodafone

Version	Date	Brief Description of Change	Approval Authority	Editor / Company
3.3	21 July 2009	Implementation of the following CRs: CR #19 (minor): Add Internet assigned domain names to be used as a sub-domain under "3gppnetwork.org", in order to save all Service Providers connected to the IPX network to have to obtain an E.212 number range in order to be addressable. Also, the procedures section is updated to reflect this change, and also better describe the current state-of-the-art. CR #20 (minor): Add IR.33 (GPRS Roaming Guidelines) in the references section, add a new domain name to be used for naming of non-service specific nodes, add a new section on hostnames and domains (based on content from IR.33), provide extra detail on DNS Server software (also based on content from IR.33), add new section on DNS Server naming, add new section on Resource Record usage, and add references to IR.33 and the GTP spec (3GPP TS 29.060) in section 4.2 (GPRS). Also, some instances of "operator" are corrected to "Service Provider".	IREG Packet	Nick Russell, Vodafone
4.0	10 December 2009	Implementation of CR #21 (Major): To document the lessons learned after the ENUM trial, and to make the whole specification of the GRX/IPX Carrier ENUM take a more top-down approach. New template also applied.	DAG #64	Nick Russell, Vodafone
4.1	3 March 2010	Implementation of CR #22 (Minor): addition of "bcast" sub-domain to "mnc<MNC>.mcc<MCC>.pub.3gppnetwork.org". Minor editorial corrections also made, including clarification on a zero being inserted on the left side of any 2 digit MNCs used in domain names e.g. 15 becomes 015.	IREG Packet (email approval)	Nick Russell, Vodafone
5.0	21 July 2010	Implementation of CR#23 (Major): Updates to domain names used on the GRX/IPX network and inter-SP links	DAG #71	Nick Russell, Vodafone
5.1	13 August 2010	Implementation of the following CRs: CR #24 (Minor): Support of IP versions in DNS CR #25 (Minor): ENUMservice field value for SIP-I/PVI	IREG Packet (email approval)	Nick Russell, Vodafone
6.0	1 December 2011	Implementation of CR#26 (Major): Addition of new '.ipxuni' domain name and sub-domain name used for "well known" XCAP Root URI to "mnc<MNC>.mcc<MCC>.ipxuni.3gppnetwork.org"	DAG#86	Gert Öster, Ericsson

Version	Date	Brief Description of Change	Approval Authority	Editor / Company
7.0		Implementation of the following CRs - CR #28 (Major): Addition of new subdomain for RCS/RCS-e as "rcs.mnc>mnc>.mcc<mcc>.pub.3gppnetwork.org" CR #29 (Major): Removal of sub domain name for the "XCAP root URI" from the "ipxuni" domain name and adding a new sub domain as xcap.ims.mnc<mnc>.mcc<mcc>.pub.3gppnetwork.org, and adding a new subdomain for bootstrapping when ISIM is used as bsf.ims.mnc<mnc>.mcc<mcc>.pub.3gppnetwork.org,	IREG#62 DAG#92	Gert Öster, Ericsson
8.0	23/11/2012	Implemetation of the Following CRs • CR 29 (Major) To briefly describe how GRX/IPX providers can subscribe to the RootDNS and access its services • CR 30(Major) Adding the possibility to provide Non-authoritative final ENUM responses for ported-out users based on Legacy Number Portability Information • CR 31(Major) Adding examples of Number portability solutions allowing the IPX/GRX ENUM to work for countries without a national Tier-1 ENUM DNS server, as requested by IWG IMQ and RCS-e. • CR 32(Major) Removal of text not considering that Local Breakout for it specified method for IMS roaming in relation to VoLTE • CR 33(Major) Adding a further example of ENUM NAPTR records with regular expressions where part of the result shall be substituted by the "original" E.164 number. • CR 34(Major) To show that a Service provider does not need to provide all data for domain names the Service provider is authoritative for one DNS but that they may choose to imply multiple levels of Authoritative DNSs where a First level may refer to the Second level Authoritative DNS severs.	IREG#63 DAG#99	Gert Öster, Ericsson

Version	Date	Brief Description of Change	Approval Authority	Editor / Company
9.0	21/10/2013	Implemtation of the following CRs • CR1001 (Major) To add the “ipxnetwork.org” TLD for IPX providers that need a subdomain to identify their equipment and realms. • CR1002 (Major) To add the subdomain used for interworking untrusted non-3GPP access networks to the EPC using the ePDG. • CR1003 (Major) to clarify that text on provisioning in clause 5.4.3 only relates to ENUM and not HSS. • CR1004 (Major) To describe the routine for delegation of "pub.3gppnetwork.org" sub-domains • CR1005 (Major) To provide information on DNS resolution when IR.21 information is used. • CR 1006 (Major) To correct the e-mail address for Root DNS questions to reflect the new “gsma.com” e-mail address	IREG#65	Gert Öster, Ericsson
10.0	24/04/2014	Implemetation of the following CRs • CR 1007 (Major) To add the subdomain for the “OAM System Realm” that can be used for IP autoconfiguration services e.g. in case Self-Organizing Networks (SON) as defined by 3GPP • CR 1008 (Major) To provide guidance on naming of IMS Nodes, and to inform where guidance on EPC node name can be found	IREG#66	Gert Öster, Ericsson
11.0	16/04/2015	Implemetation of the following CRs • CR 1009 (Major) To add pointers to IR.88 for DNS configuration requirements in various 2G/3G and LTE coexistence scenarios. • CR 1010 (Major) To add the subdomain for “Bootstrapping of MBMS service Announcements” • CR 1011 (Major) To correct e-mail address to Delegation of “pub.3gppnetwork.org”	NG#01	Gert Öster, Ericsson

Version	Date	Brief Description of Change	Approval Authority	Editor / Company
12.0	01/02/2016	IR.67 CR1012 Resolver architecture for service aware IPX	NG	Frederic Paquette Tata Communications

Other Information

Type	Description
Document Owner	NG Packet
Editor / Company	Frederic Paquette Tata Communications

It is our intention to provide a quality product for your use. If you find any errors or omissions, please contact us with your comments. You may notify us at prd@gsma.com

Your comments or suggestions & questions are always welcome.