

Technical Architecture Alternatives for Open Connectivity Roaming Hubbing Model

Version 2.0

26 February 2015

This is a Non-binding Permanent Reference Document of the GSMA

Security Classification: Non-confidential

Access to and distribution of this document is restricted to the persons permitted by the security classification. This document is confidential to the Association and is subject to copyright protection. This document is to be used only for the purposes for which it has been supplied and information contained in it must not be disclosed or in any other way made available, in whole or in part, to persons other than those permitted under the security classification without the prior written approval of the Association.

Copyright Notice

Copyright © 2015 GSM Association

Disclaimer

The GSM Association ("Association") makes no representation, warranty or undertaking (express or implied) with respect to and does not accept any responsibility for, and hereby disclaims liability for the accuracy or completeness or timeliness of the information contained in this document. The information contained in this document may be subject to change without prior notice.

Antitrust Notice

The information contain herein is in full compliance with the GSM Association's antitrust compliance policy.

Table of Contents

1 Overview 4
About this Document 5
Scope 5
Purpose 5
1.1 Definitions 5
1.2 **Hub Requirements 6**
1.3 High Level Requirements 6
1.4 Open Solution: interoperability of Solutions 6
2.1 Obligation 7
Transparency 7
Efficiency 7
Quality End to End 8
Education 8
Fraud & Security 8
Availability 8
Testing 9
Contract Aggregation 9
Service & Enabler Support 9
Roaming Transparency 9
Cascade Billing 10
Interconnection with Third Parties 10
2.2 Technical Requirements 10
Centralized Signalling 10
Cascading Signal Flow 11
Agreement Management 11
Testing & QoS Monitoring 11
Billing, Settlement & Clearing 12
Fraud-prevention Mechanisms 12
Service Troubleshooting 12
Business Intelligence & Reporting 12
3.1 Technology Coexistence 12
3 3.2 **Technical Architecture 12**
3.3 Current Bi-lateral Architecture for SS7 Based Connections 12
3.4 Current Bi-lateral Architecture for Diameter Based Connections 13
Process Flow 14
OC-Roaming Hubbing Common Aspects 14
Operators with ‘Shared’ Network Elements 14
Traffic Separation 15
3.5 Symmetric Routing 17
Testing 17
Naming Conventions 18
SS7 Based OC Roaming Hubbing Architecture Alternatives 18

Alternative 1: MTP Direct Routing 18
Alternative 2: SUA/SCTP 27
Alternative 3: SCCP Translation Type (TT) 36
3.5.2 Alternative 4: Alias GT 45
3.5.1 Diameter based OC Roaming Hubbing Architecture Alternatives 56
3.6.1 Alternative 1: Direct connection 56
3.6.3 Architecture Description 56
3.6 3.6.4 Call Flows 57
3.6.2 Alternative 2: Origin/Destination Realm Based Routing 58
3.6.3 Alternative 3: Destination-Realm modification 60
4 Interoperability of Architectures 63
Interoperability within an OC Roaming Hub 63
Interoperability between OC Roaming Hubs 63
4.1 4.2.2 Hub-to-Hub via MTP Direct Routing 64
4.2 4.2.3 Hub-to-Hub via SUA/SCTP over IP 65
4.2.4 Hub-to-Hub via Diameter Direct Routing Architecture 66
Interoperability with SMS Interworking when Roaming 67
4.3 Interoperability with TCAPsec 68
4.4
Annex A Roaming Hub and SMS-IW 70
A.1 Background 70
A.2 Signalling independent of routing method 72
A.2.1 MOForwardSM 72
A.2.2 SRI-SM and MTForwardSM 72
A.2.3 AlertSC / InformSC 79
A.3 Signaling dependant UPON routing method 80
A.3.1 MOForwardSM 80
A.3.2 SRI-SM and MTForwardSM 80
A.3.3 ReportSMDeliveryStatus 88
A.3.4 AlertSC / InformSC 89
A.3.5 MOForwardSM 89
A.4 SMS Interworking Anomolies 89
A.4.1 Traffic Separation for MTP/TT/SUA 89
A.4.2 Address Routing Alias GT 91
A.5 Conclusion 93
Annex B Document Management 94
B.1 Document History 94
B.2 Other Information 94

1 Overview

Roaming and inter-working are at the core of the GSM success story. 3GSM subscribers now expect to access the same set of services at home and abroad. They expect to be able to share all 3GSM services with any other subscriber on any network.

The bi-lateral relationship, on which this success has been based, however, is now becoming a limiting factor to future success. With over 600 GSMA operator members, diversification of services and an increasing number of access technologies, it is unlikely that the current paradigm of bilateral relationships between networks will meet the expectations of operators going forward.

The overall cost of establishing bi-lateral relationships is preventing some operators from opening new roaming and inter-working agreements. Often when a new roaming relationship is taken individually, the venture represents insufficient additional value for an operator that is already established with other roaming partners in the region or when the volume potential is low. With the introduction of new services, the problem becomes more evident and the overall costs greater.

This is a particular concern for the newer GSM networks. Those networks that are late entries into this market are finding it difficult to set-up roaming relations with the more established operators.

At the same time, the problem is arising for many established operators who already have voice roaming relationships, but face low return on investments in new 2.5/3G roaming relationships and SMS inter-working.

Open Connectivity for roaming is defined as the following:

- To ensure that an operator is able to allow its customers to roam on the network of any other GSMA member.

Open Connectivity is needed for roaming so that:

- The continued growth of GSM is ensured and all GSMA members can access the full advantages of 3GSM Roaming
- Operators can optimise costs involved in establishing and maintaining 3GSM Roaming

Note: Where 3GSM is referred to all GSM phases of technology are included such as 2/2.5 & 3G. The intention is also to include services and enablers such as CAMEL, MMS and IMS.

The Open Connectivity Roaming Hubbing Trial Interest Group held a successful Proof of Concept in January 2007. This will be followed by more extensive testing during a Roaming Hubbing Trial.

A roaming hub service provider assists operators with signalling traffic, testing, support, and troubleshooting. An operator can benefit by have a single point of presence with a roaming

hub service provider for issues related to signalling traffic, testing, support, troubleshooting, etc.

A roaming hub is expected to fulfil the requirements defined by the Open Connectivity Group of GSMA. Roaming hub requirements are defined later in this document.

About this Document

1.1 The document consists of three major sections dealing with hubbing requirements, technical architectures, and Interoperability. The technical architecture section defines separate and distinct architecture choices available to an OC Roaming Hub Service Provider (RHSP) and 4G OC Roaming Hub Service Provider. The interoperability section covers interworking between architectures, and interworking between hubs.

Scope

1.2 This document describes specific aspects of the technical architecture alternatives for Open Connectivity Roaming Hubs that are being recommended by the IREG Roaming Hub Group.

Purpose

1.3 The purpose of this document is to provide details on Open Connectivity roaming hubbing architecture solutions for mobile roaming.

Definitions

1.4

Term	Definition
AGT	Alias Global Title
BOICexHC	Bar Outgoing International Calls except Home Country
CAP	CAMEL Application Part
GT	(SS7) Global Title
GTT	Global Title Translation
HUR	High Usage Report
IP	Internet Protocol
IREG	Interworking, Roaming Expert Group (GSMA)
ISPC	International Signalling Point Code (ITU standard)
IWG	Inter-Working Group (GSMA)
M2PA	MTP 2 Physical Adaptation Layer of SIGTRAN
M2UA	MTP 2 User Adaptation Layer of SIGTRAN
M3UA	MTP 3 User Adaptation Layer of SIGTRAN
MAP	Mobile Application Part:
MNO	Mobile Network Operator
MNP	Mobile Number Portability
MS	Mobile Station.
MTP	Message Transfer Part
NRTRDE	Near Real Time Roamer Data Exchange

Term	Definition
OC Project	Open Connectivity Project
RAP	Returns Accounting Process
SCCP	Signalling Connection Control Part
SCTP	Stream Control Transmission Protocol
Solution Provider	Provider of the OC Roaming Hubbing service
SS7	Signalling System 7
SUA	SCCP User Adaptation Layer of SIGTRAN
TADIG	Transferred Account Data Interchange Group (GSMA)
TAP	Transfer Accounting Process
TCAP	Transaction Capabilities Application Part
TCP/IP	Transport Control Protocol over IP
TT	Translation Type

2 Hub Requirements

2.1 High Level Requirements

This section contains a number of high-level requirements that need to be met by any Open Connectivity solution employed in the roaming environment. Inter-working requirements are out of scope for this section. The source of information presented in this section is OC Doc 8/004rev1 High Level Requirements for Open Connectivity, 18 October 2005 and LTE and EPC Roaming Guidelines v11.0 [IR.88] The contents have been slightly modified to focus on roaming hubs.

Open Solution: interoperability of Solutions

The Solution Provider must be prepared to work with all other providers of like-solutions to ensure that the solutions are inter-operable. Like-solutions are defined as any solution that is in compliance with Open Connectivity requirements.

This must be achieved without compromising the quality of the solution. The solution must remain efficient and guarantee quality at all times.

The objective is to enable operators to enter the market in a timely manner with access to the broadest range of partners and to have a choice of Solution Provider.

Upon the request of the Client Operator the Solution Provider must provide the connection (either direct or through a Third Party) with any mobile operator with whom the Client Operator wants to activate roaming services. This connection must be provided even if such mobile operators are not connected directly to the Solution Provider's system (but are connected to a Third Party). Should there be neither a direct connection nor a connection to a Third Party, the Solution Provider must contact the targeted mobile operator and inform the Client Operator accordingly.

In any case, the connection will be established at no extra-charge (with respect to the charging already applied for the connection to the Participating MNOs) and within a timeline agreed with the Client Operator.

A maximum of 2 (two) Solution Providers must be involved in this roaming relationship.

Obligation

An operator may have valid justification (regulatory, strategic or commercial) not to start roaming relations with another operator. Any solution employed must then allow a Client Operator to opt out roaming relations with any operator(s) of their choosing.

Transparency

The Solution Provider must:

- give full visibility of all components of the price levied by the Solution Provider, i.e. the fee applied by the latter as remuneration for the service offered and the charges levied by operators providing roaming services.
- provide the client operator information on which network the traffic is originating and terminating, and on any third party (i.e. other provider/carrier/operator) involved in the traffic handling/delivery. The involvement of Roaming Hubs shall neither affect the visibility of the HPMN or the VPMN i.e.

    - It must be visible to the VPMN from which Home network subscribers are actually roaming to its network (Origin of Inbound Roamers)
    - It must be visible to the HPMN to which VPMN its subscribers are roaming to (Destination of Outbound Roamers)
    - For each roaming subscriber it must be visible to which network he/she is roaming to

Technical information required for troubleshooting must be visible to both HPMN and VPMN.

In addition, any Home Billing solutions employed by the Home Network shall work seamlessly. Technical transparency may also be required to allow the Client Operator to meet possible regulatory, legal and commercial obligations.

- never manipulate any content, format or any information related to the traffic transmitted through its solution, in order to avoid fraud and to ensure consistency, unless manipulation is explicitly required within GSMA specifications or required by local regulations and laws, or subject to any arrangements made between two parties.
- provide all necessary technical information to the Client Operator to enable timely trouble shooting (e.g. routing, connectivity,…).

Efficiency

All solutions must make efficient use of network resources (network infrastructure, signalling links, etc).

The solution must minimise any overhead on the visited or home networks.

The solution must minimize network configuration restraints. The solution shall be as good or better than current bi-lateral arrangements

Quality End to End

The Solution Provider must give a commitment on the QoS/level of performance for end-to-end traffic transmission. There must be no reduction in quality including the case when Third Parties (i.e. other providers/carriers/operators) are involved in the traffic transmission end-to-end. Additionally, the provider must be able to provide a mechanism to measure the level of quality met.

For roaming the solution must provide quick and accurate network selection when a roamer is registering on the network. This must take into account PMN preferences as specified by the HPMN.

The transmission of billing data must not be delayed by the solution offered. TAP and RAP exchange must still fit the timescales outlined within BA.08.

The provider shall offer the Client Operator comprehensive and efficient service support for its own services in terms of:

- service management (customer care service on non-fault situations and forecast + report exchange)
- fault management including as a minimum:

    a) proactive fault detection service
    b) fault resolution service
    c) trouble report handling service h24x7

For roaming, these obligations extend to the end-to-end service from the Client Operator network to the roaming partner operator network including the case of Third Parties involved in the traffic handling.

Education

Solution Provider must offer full support and training to users of the solution.

Fraud & Security

All roaming solutions must ensure the Near Real Time Record Data Exchange (NRTRDE) is delivered in a timely and correct manner as defined in GSMA PRDs. In addition, where the VPMN supports Near Real Time Record Data Exchange (NRTRDE) the Solution Provider must also facilitate this exchange of information.

Availability

All solutions must ensure a highly available, redundant and robust architecture. All providers of solutions must have an operational disaster recovery plan to execute in the event of disaster. Where the end-to-end service is via more than one Solution Provider then the disaster recovery plan needs to be agreed between all Solution Providers.

The Solution Provider must make information on their End-to-End Disaster Recovery Plan available to the Client Operator.

Testing

The solution must decrease testing time and effort to a minimum for the operators involved.

The Solution Provider must be able to perform all end-to-end tests described in the appropriate IREG and TADIG documentation and will ensure that the services offered function correctly and billing exchange details are correct.

The Client Operator will always have the option to outsource some or all of the end-to-end testing to the provider or to perform them on his own.

Contract Aggregation

The Solution Provider will include in the contract with the Client Operator the relationship required with any Elected Participating MNO and any involved Third Party provider to ensure the proper provisioning of roaming data.

It is expected that the Client Operator will just need to negotiate and sign one contract with the provider in order to have contractual Inter-working and roaming relationships with all participating operators.

Service & Enabler Support

It is foreseen that there could be the need for different solutions for Inter-working than that of roaming. Likewise there could be the need for different solutions for different types of services within these markets. However, it is required that where possible one solution will aim to support all services and enablers. To this extent, solutions need to consider and be compatible with existing services/enablers and be futureproof.

Additionally, services must be offered independently by the Solution Provider to allow operators to choose which services to deploy via the Solution Provider.

Roaming Transparency

Transparency must be granted by the solution on:

- The Destination of the outbound roamers – The home operator must always have full technical and commercial visibility of which country their customer is roaming to and which network the customer is using.
- The roaming partner network – The visited operator must have full visibility of inbound subscribers and to which home network they belong.
- The Solution Provider’s pricing components, i.e. IOT plus transit fee per transaction.

Without full transparency of the IOT associated with each Roaming Partner, there is a risk that the provider charge inappropriate additional Transit Charges.

This cost increase will effectively inflate the retail price and slow down the market take-up.

There is also a risk that the provider can discriminate against some operators by increasing the prices charged for transit fee on specific Elected Participating Operator networks.

This would happen in such a way that operator A may have a tariff X to roam on operator B, whereas Operator C may be charged tariff Y to roam on the same network B.

It is however necessary to avoid such situations since this would create a barrier to the market take up and would introduce an element of discrimination.

Cascade Billing

The Solution Provider will comply with a cascade-billing model (as per the current voice model). The provider will manage in total the billing and financial relationship with the roaming partners and peered providers.

The Client Operator will have a sole billing and financial settlement relationship; that is the one with the provider.

It is the responsibility of the provider to establish the appropriate billing arrangements with all the parties involved in the roaming enablement, to ensure that the end-to-end service works in a transparent manner.

Cascade Billing offers a Client Operator the opportunity to receive a single invoice from the provider for all incoming and outgoing roaming traffic on their network.

If the provider was to offer a technical connection only, the economies of scale will be greatly reduced since Client Operators would have to maintain bilateral settlement arrangements regardless of the volume of roaming traffic passed. This would add a considerable fixed cost per roaming relationship and thus potentially create a barrier to further market take tp.

Interconnection with Third Parties

In the case of the home network using a different Solution Provider to the visited network, it will be the home network's Solution Provider who is responsible for connection with the visited network's provider to guarantee successful provisioning of roaming services.

The Solution Provider will implement free of charge all necessary interconnections with any connected Solution Provider to ensure the Client Operator will have roaming with the requested roaming partners.

This means that transportation through any connected provider, if needed to route traffic to/from the visited network, is part of the service rendered by the home Solution Provider.

It is anticipated that the provider will not charge any extra fee to the Client Operator for the transit of traffic routed through a connected provider.

2.2 The traffic exchanged between the home and visited networks through the provider will have to be transmitted end-to-end through a maximum of two Solution Providers.

Technical Requirements

Centralized Signalling

Centralized signalling implies that signalling for all Roaming partners, which are not bi-laterally implemented, is routed to the Solution Provider's Roaming Hub. The objective of

Centralized signalling is to reduce network and data configuration on part of Client Operators.

Cascading Signal Flow

In the OC Roaming Hub architecture, a cascading signal flow from source to destination and back to source will be used, i.e. the signalling messages are relayed by the intermediate entities in a step-by-step manner.

Two signalling flows are under consideration.

- One flow uses tunnelling to move signalling messages from source to destination and back. Global title digits, embedded address digits, realm and host addresses are not altered when tunnelling is used. Tunnelling does not require any changes to address digits in SCCP, TCAP, MAP, CAP, IP, SCTP and Diameter based Mobility Management protocol. Multiple tunnelling methods have been proposed.
- The second flow uses address manipulation to move signalling messages from source to destination and back. Global title digits, embedded address digits, realm and host addresses are altered when using this method. Address manipulation requires changes to address digits in SCCP, TCAP, MAP and CAP. Multiple address manipulation methods have been proposed.

Addressing information may be modified depending on the architecture approach used, at each step of the signal flow. In particular, at any stage of the flow, the SCCP and MAP address, Diameter routing labels and any identity AVP (if applicable) and the routing AVP in S6a/S6d will relate to the sender of the signalling message and also relate to the entity to be charged within the cascade-billing model. When a 4G roaming service is established/migrated through/to a OC Roaming Hub, MNOs and IPX networks adjacent to the OC Roaming Hub must ensure that anti-spoofing checks on the IP and Diameter layers are adapted accordingly.

Addressing information modification imposes additional complications with respect to MNO applications because true E.164 addressing information and the routing AVP in S6a are not reflected in the actual signalling messages. The true E.164 addressing information and routing AVP are available only through a subsequent access to externally provided address mapping tables.

Agreement Management

Agreement management functionality is implemented by the Solution Providers' Roaming Hubs to verify the contractual relationships between Roaming partners before allowing the signalling exchange to proceed towards the destination. Any specific black-listing and/or Opt-in/Opt-out arrangements specified by Client Operators are also taken into account for such verification.

Testing & QoS Monitoring

Testing and QoS Monitoring is a value-added function of the OC Roaming Hub, whereby the Solution Provider can bring-in significant efficiency gains for the Client Operator by assuming the responsibility of performing the IREG/TADIG testing on behalf of the Client Operator with its Roaming partners. Additionally, the Solution Provider can also perform periodic

monitoring and testing of the different KPIs/metrics for various services provided by its Client Operator. Both the Testing and QoS monitoring can be performed either automated or manually.

Billing, Settlement & Clearing

Hubs are expected to provide this function in a post-trial commercial service offering.

Fraud-prevention Mechanisms

The Fraud-preventions mechanisms, if implemented may include NRTRDE, HUR, Anti-Spamming, Anti-Spoofing features. Hubs are expected to provide these functions in a post-trial commercial service offering.

Service Troubleshooting

The Hub shall be able to provide visibility into message routing, and actual path traversed by any specific message for troubleshooting purposes. Hubs are expected to provide this function in a post-trial commercial service offering.

Business Intelligence & Reporting

Hubs are expected to provide this function in a post-trial commercial service offering.

Technology Coexistence

If an OC Roaming Hub is offering both 2G/3G and 4G services the OC Roaming Hub will ensure that all technologies will coexist on the OC Roaming Hub.

3 Technical Architecture

3.1

Current Bi-lateral Architecture for SS7 Based Connections

This section illustrates the technical connectivity architecture that is used between operators currently to support roaming with each other using standard SS7 MAP in a bi-lateral model.

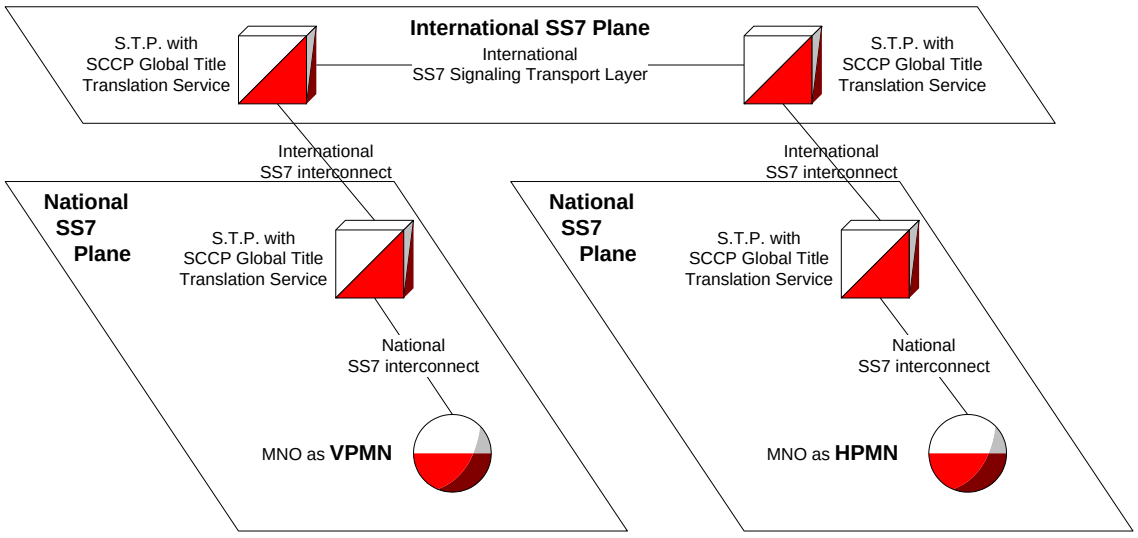

Figure 1: SS7 technical connectivity architecture

The current bi-lateral international roaming network environment depends upon a layered architecture with an international signalling plane and multiple national signalling planes. Within each plane the SCCP called party address is used to determine the plane, and node identity of the next transfer point for the onward routing of an MSU.

Generally, a Mobile Network Operator performs roaming signalling on a national SS7 plane to an SCCP service provider. The SCCP service provider operates with both a national identity for the MNO and an international identity to perform MSU distribution on the international SS7 plane.

The current bi-lateral international roaming traffic transits the national and international networks where the final destination of an MSU is driven by the SCCP Called Party Address. The final destination for a given SCCP Called Party Address is always the same irrespective of the source of the MSU. It is this last point that causes contention with the use of a roaming hub.

The introduction of a roaming hub causes the destination of a given SCCP called party address to differ based on the relationship between the sender and receiver of the MSU. When the relationship is bi-lateral, the MSU transits the network from sender to receiver. When the relationship is through a roaming hub, the MSU transits from sender to roaming hub, and then from roaming hub to receiver.

It is expected that both Roaming Hub and bi-lateral connections are compatible and thus can co-exist with each other.

3.2 Current Bi-lateral Architecture for Diameter Based Connections

This section illustrates the technical connectivity architecture that is used between operators currently to support roaming with each other using standard Diameter in a bi-lateral model.

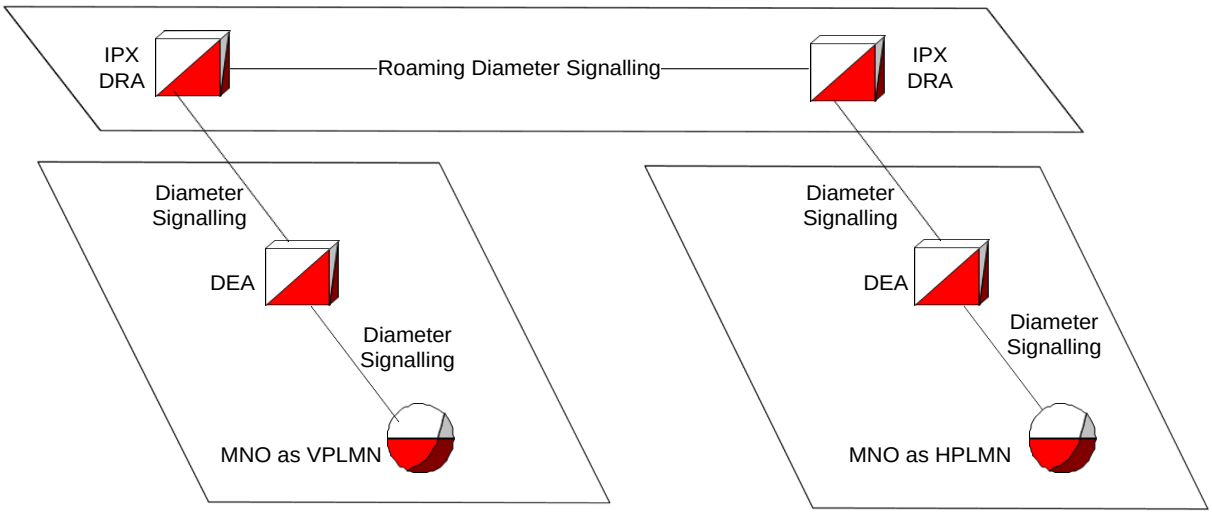

Figure 2: Diameter technical Architecture

In the current bi-lateral LTE international roaming architecture, Diameter Realm-based routing is applied between home and visited networks via IPX providers. Diameter signalling is based on hop-by-hop routing and is using the same path symmetrically for request and response. The recommendation is that a DEA should be located at the edge of an LTE Operator's core network for topology hiding purposes.

In order to maintain multiple roaming connections the Diameter routing management of an Operator can be delegated to an IPX that will use a DRA as a Diameter signalling gateway or/and for normalization to ensure interoperability between Operators.

Process Flow

3.3

- Operators will continue to maintain bi-lateral connections through standard signalling procedures over SS7 or Diameter networks.
- No changes if operators choose to maintain bi-lateral agreements.

OC-Roaming Hubbing Common Aspects

3.4

Operators with 'Shared' Network Elements

A 'Shared' network element is a physical device that fulfils a specific functional role for more than one mobile network operator simultaneously. The type of network element and how it is addressed determines the impact on the relationship the operators can have with roaming hub providers. The type of network element defines the configuration requirements that may need to be shared between operators.

In GSM networks, a shared MSC/VLR will require roaming E.212 (and E.214) configuration information that would not be required of an HLR. Where roaming configuration data cannot be separated for each operator, the operators will be limited to use the same hub for the shared roaming configuration data.

If the physical device is logically addressed with the same E.164 value for multiple operators, the operators will be limited to use the same hub for the shared network element.

The following list of network elements has been known to be shared at times between operators and between countries:

- SMSC
- HLR
- MSC/VLR
- GGSN
- SGSN

For 4G networks, 3GPP has defined two approaches for the eUTRAN sharing:

- The Multi-Operator Core Network (MOCN) approach
- The Gateway Core Network (GWCN) approach

In the MOCN approach the shared eUTRAN is connected to several Core Networks via the S1 interface. Each mobile network operator has its own EPC. Thus the MME, the SGW and the PGW are not shared and are located in different Core Networks.

In the GWCN approach, contrary to the MOCN approach, the MME is also shared between the different mobile network operators.

In roaming, the MOCN approach is a drawback as HSS address of each roaming partner needs to be defined in shared MME for each Core Network connected to the shared eUTRAN.

Traffic Separation

Common aspects of Open Connectivity roaming hubbing apply to all architecture alternatives. One common aspect that applies to all architecture alternatives is the separation of signalling traffic associated with roaming.

Assume a given mobile network operator chooses to have both bi-lateral roaming agreements and open connectivity roaming relationships. The mobile network operator has a responsibility to separate traffic between the bi-lateral roaming agreements and the Open Connectivity roaming relationships.

In case of SS7 signalling the roaming traffic separation is performed as illustrated below:

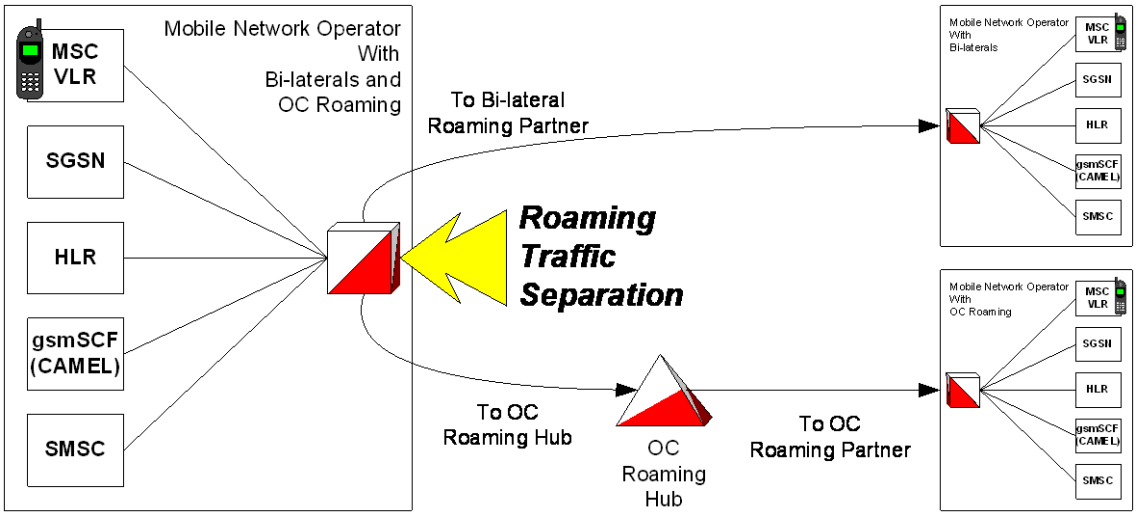

Figure 3: SS7 signalling the roaming traffic separation

In case of Diameter signalling the roaming traffic separation is performed as illustrated below:

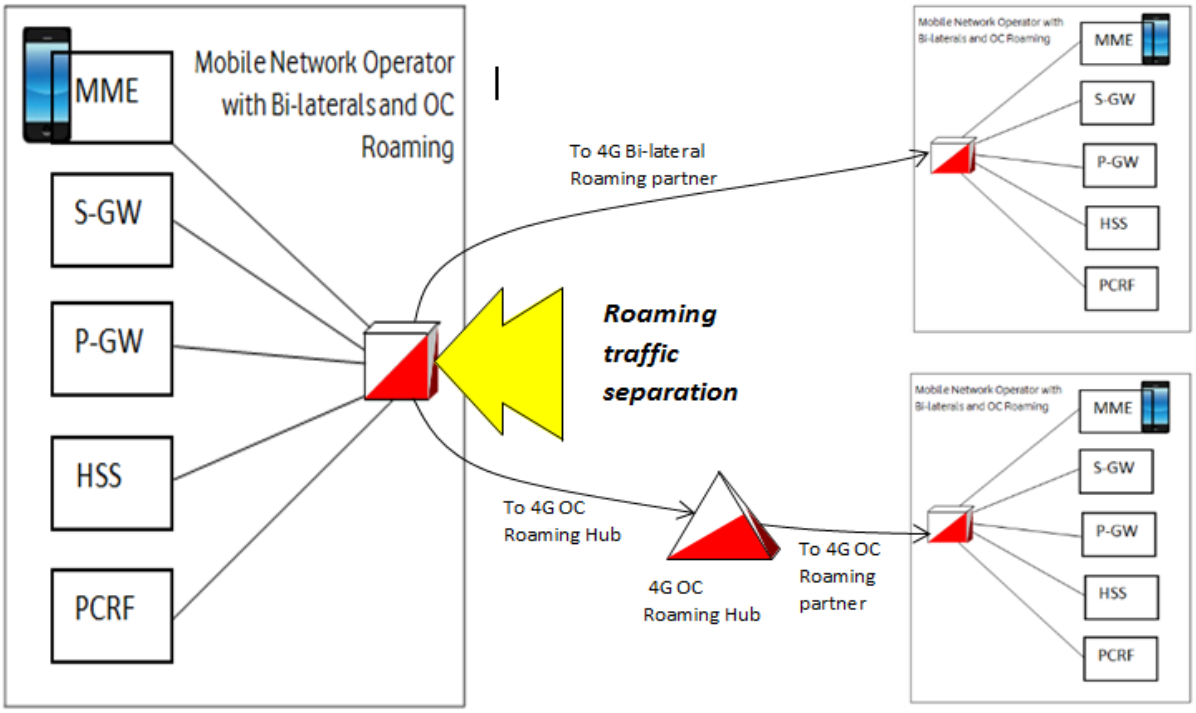

Figure 4: Diameter signalling the roaming traffic separation

Signalling traffic associated with bi-lateral roaming agreements transits the national and international signalling network infrastructure currently in use. Signalling traffic associated with OC roaming relationships is separated from the existing bi-lateral roaming traffic and directed to the appropriate OC Roaming Hub.

The separation of traffic is a basic and common aspect to all OC Roaming Hub architectures and must be performed by the mobile network operator as part of the implementation of OC roaming, unless a solution offering for separation is made by the OC Roaming Hub.

In 3GSM, the separation of signalling traffic is accomplished through provisioning of various addresses within the signalling environment of each operator. Addresses associated with signalling traffic are comprised of E.212, E.214, and E.164 values.

An OC roaming operator in the role of VPMN will need to direct E.212 and E.214 subscriber addresses toward the chosen OC Roaming Hub. Likewise, E.164 addresses of HLRs, gsmSCFs, Home MSCs, Home SMSCs including Subscriber SIM based SMSCs will need to be directed toward the chosen OC Roaming Hub.

An OC roaming operator in the role of HPMN will need to direct E.164 VLR, MSC and SGSN addresses toward the chosen OC Roaming Hub.

In 4G the separation of signalling traffic is accomplished through Destination-Realm modification performed by the Diameter Proxy agent of the PMNs. The traffic separation can be also performed through Origin/Destination based routing by 3rd party Diameter providers. Information associated with Diameter signalling traffic are comprised of Destination-Host, Origin-Host, Destination-Realm and Origin-Realm.

Symmetric Routing

The signalling traffic associated with an OC roaming relationship must transit each of the operators' chosen hubs. Each operator in an OC roaming relationship may have their own hub provider. Hub-to-hub interworking ensures that the signalling traffic of each operator transit their chosen hub as shown in the diagram below.

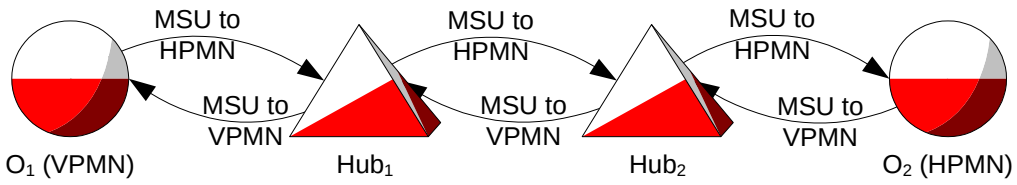

Figure 5: Hub-to-hub interworking signaling traffic

Each hub provider (Hub_1 and Hub_2) must be in the path to ensure that the signalling is associated with an established relationship and that the state of the relationship is correct relative to the signalling operations and entities. The signalling environment for OC roaming hubbing involves cascaded billing with financial liability. The risks associated with cascaded billing and financial liability requires that the signalling traffic flow with symmetric routing through the hubs, thereby affording the hub providers the opportunity to reject inappropriate signalling traffic.

Symmetric routing is a common requirement for the OC roaming hubbing. Asymmetric routing must not be permitted. For the avoidance of doubt, this pertains to routing of messages and their corresponding ACK or acknowledge or RESP or response.

In the MSU flow diagram shown above, four (4) distinct management entities are involved with the routing decisions to move MSUs between the VPMN and HPMN. The synchronization of routing is a responsibility of each management entity [O_1, Hub_1, Hub_2, O_2].

In 4G OC Roaming Hubbing, Diameter request-and-answer (response) uses the same path symmetrically so there is no asymmetry issue.

Testing

The solution must decrease testing time and effort to a minimum for the operators involved.

The Solution Provider should be able to perform the end-to-end tests as described in IR 23: "Organisation of GSM International Roaming Tests" and will ensure that the services offered function correctly and billing exchange details are correct.

The HUB will have to propose to the PMN testing procedures which are fully compliant with the IREG test PRDs. In order to guarantee the quality of the service it will be needed that the HUB will define together with the PMN an initial test set and subsequent lighter test set. The

common test could be skipped if bilaterally agreed between the PMNs and the HUB. The same rule will be applied in case of peering.

For the common test, the simulation of HLR can be used in order to trouble-shoot VLR behaviour, but it will not be possible to use this kind of simulation to validate the test case itself.

In the case where the HLR behaviour needs troubleshooting, the MSC/VLR can be simulated, but it will not be possible to use this kind of simulation to validate the test case itself.

The Client Operator will always have the option to outsource some or all of the end-to-end testing to the provider or to perform them on his own.

In the case where the functionality implemented in the PMN network does not allow the execution of certain test case, the PMN cannot expect that the HUB will be in a position to execute this test case.

Naming Conventions

The seamless end-user Roaming experience in an Open Connectivity model is made possible by a complex and comprehensive set of procedures performed by the Roaming Hub (read 'Solution Provider'), which are currently performed by the Operators themselves. This section describes the envisioned technical architecture for the OC-Roaming Hubbing alternatives.

The following convention is followed in this document:

- O1 – refers to the visited operator, VPLMN
- O2 – refers to the home operator, HPLMN
- HUB1 – O1's roaming hub (if applicable)
- HUB2 – O2's roaming hub (if applicable)
- IGP1 – O1's International SCCP Gateway Service Provider
- IGP2 – O2's International SCCP Gateway Service Provider
- GW1 – O1's SIGTRAN-based Signaling Gateway (if applicable)
- GW2 – O2's SIGTRAN-based Signaling Gateway (if applicable)

3.5 SS7 Based OC Roaming Hubbing Architecture Alternatives

Alternative 1: MTP Direct Routing

Brief Synopsis

The basic principle of this architecture is to use direct MTP routing between a mobile network operator's signalling network and an Open Connectivity roaming hub. This architecture is not universally applicable, but it can provide key capabilities in certain environments. The MTP route is used as a tunnel for MSU transfer between the network elements of an MNO and a roaming hub.

Architecture Description

The MTP Directing Routing architecture depends upon the MTP Routing Label for all the information necessary to transfer MSUs between the network of the MNO and a roaming hub.

Four (4) different standards exist today for the definition of a MTP Routing Label: ITU, ANSI, China-7, and Japan-7. The actual transport protocol is not indicated within the MSU nor MTP routing label. The actual protocol is known implicitly as part of the physical network connections.

The layout of each standard in shown in the following figures:

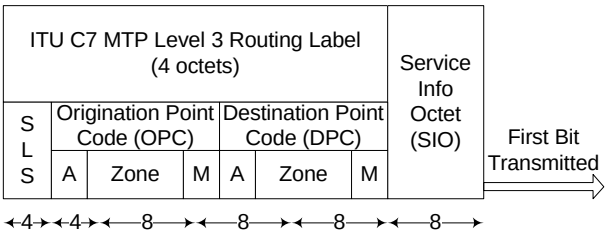

Figure 6: ITU MTP Routing Label

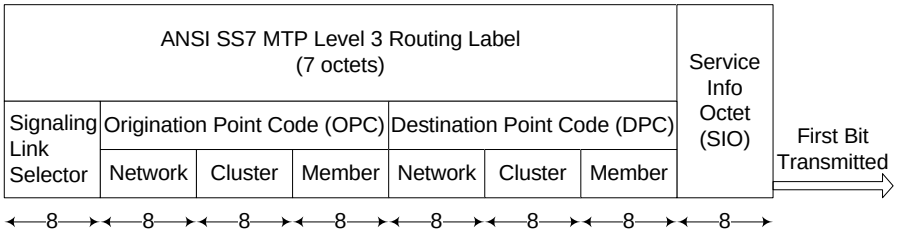

Figure 7: ANSI MTP Routing Label

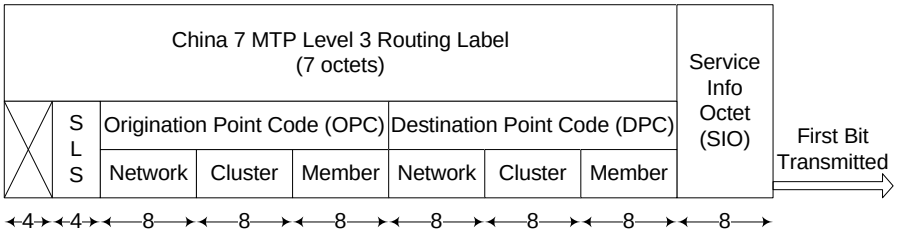

Figure 8: China-7 MTP Routing Label

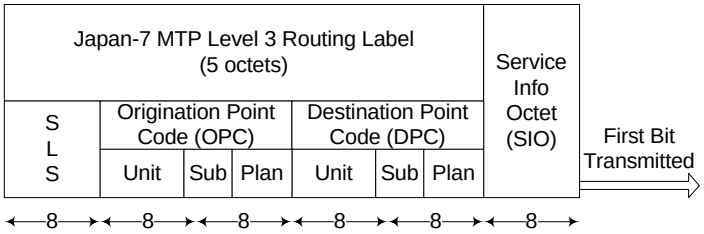

Figure 9: Japan-7 MTP Routing Label

In addition to the four (4) different definition of MTP routing labels, the transport protocol can identify different types of networks within the same transport protocol. Each of the standard routing labels shown above is preceded by a Service Information Octet (SIO), as shown below:

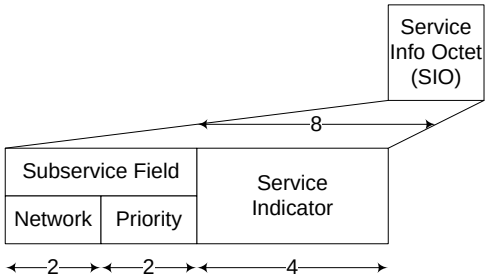

Figure 10: Service Information octect.

The SIO contains a service indicator to identify the next protocol layer (e.g. 0011 = SCCP). In ANSI, ITU and China-7, the sub-service field contains a 2 bit network identifier. The four Network Indicator values are assigned as follows:

- Bits
- 00 International
- 01 Spare – International Use
- 10 National
- 11 Spare – National Use

Both the origination and destination point codes of the MTP Routing Label are defined within the context of the network identified in the Service Information Octet. Currently, only ITU is used in an international context. All MTP transport standards are used in national contexts, but only ITU is used internationally. ANSI MTP is used throughout World Zone 1 (WZ1), which operates under the North American Numbering Plan Administration (NANPA). China-7 and Japan-7 are limited to their national environment respectively.

For two network elements to exchange MSUs with MTP Direct Routing, both network elements must use the same variant of MTP, with the same network indication.Their point codes share a common protocol definition and a common network definition.

A network element addressed with a national point code cannot use MTP Direct Routing to exchange MSUs with a network element addressed with an international point code.

When the MNO's signalling network uses the same implicit MTP and network definition as an Open Connectivity Roaming Hub, then MTP Direct Routing is a possible architecture for Open Connectivity Roaming Hub.

Call Flows

MTP Direct Routing Flow

The following diagram shows two (2) PLMNs interconnected via SS7 links with an Open Connectivity Roaming Hub. For simplicity, each PLMN is shown with only one Signal Transfer Point (STP) between a network element (HLR or VLR) and the OC Roaming Hub. Multiple STPs could be used to accomplish routing between an MNO and an OC Hub.

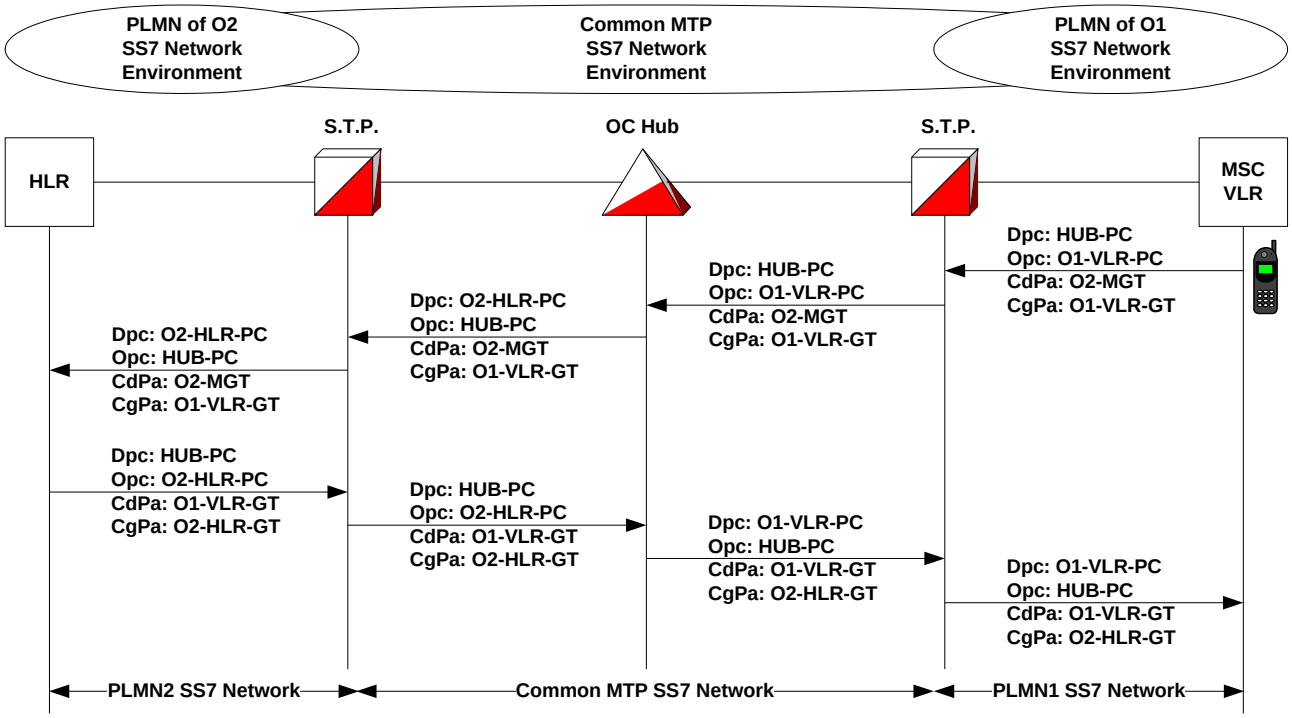

Figure 11: MTP Direct Routing Signal Flow

Steps:

1. PLMN O1's VLR issues MAP-Update-Location
2. SCCP Called Party is GT Routed on Mobile Global Title of the MS (CdPa: O2-MGT)
3. SCCP Calling Party is GT Routable on Global Title of the VLR (CgPa: O1-VLR-GT)
4. The MGT entry in VLR indicates that the MSU should be forwarded to the OC Hub's point code (HUB-PC). The MTP Routing Label is constructed with the destination point code of HUB-PC and the originating point code of O1-VLR-PC.
5. In this example call flow, the HUB-PC is defined in the VLR over a route set over that use the physical links to an STP. The OC Hub's point code must be provisioned in the VLR as well as any intermediate network devices (e.g. STPs).
6. The MSU is forwarded over physical links to O1's STP (Dpc: HUB-PC) from local VLR (Opc: O1-VLR-PC)

PLMN O1's STP evaluates the DPC (HUB-PC), notes that it is not the STP's point code and attempts to onward route the MSU. The STP uses the DPC (HUB-PC) to determine that the next network element is the OC Hub. In actuality, multiple STPs may be involved to onward route the MSU to the OC Hub. Each STP will perform exactly the same evaluation and determination for distribution. The SCCP layer is unchanged and forwarded as received.

MSU is forwarded to OC Hub (Dpc: HUB-PC) from O1's STP (Opc: O1-VLR-PC). The OPC is not modified by the STP because it only performed transfer services. The STP did not invoke higher layer functions like SCCP routing. The OPC is only modified when high layer functions are invoked within the STP.

The Open Connectivity Roaming Hub uses information within the received MSU to determine the existence of an OC roaming agreement between the serving and home PLMNs. An OC roaming agreement permits the operation to be forwarded accordingly. The OC Roaming Hub determines the destination of the signalling message based on the Called Party Address (SCCP CdPa) effectively performing intermediate Global Title routing. The determination provides a point code route to PLMN O2's HLR. A routing label is constructed for the MSU, destined to PLMN O2's HLR. The physical links to O2's STP are used for the route set associated with O2's HLR point code. The SCCP contents are not changed and forwarded as received with repackaging of the routing label origination and destination point codes.

MSU is forwarded to O2's STP (Dpc: O2-HLR_PC) from OC Hub (Opc: Hub-PC)

PLMN O2's STP evaluates the DPC of the received MSU. Since it is not the STP's point code, it is onward routed to the DPC. The STP determines that the next network element is the PLMN O2's HLR. The SCCP layer is unchanged and forwarded as received.

MSU is forwarded to O2's HLR (Dpc: O2-HLR-PC) from O2's STP (Opc: HUB -PC). The STP does not alter the OPC since it is not the addressed destinion and it did not invoke any high layer function, like global title routing.

The remaining signalling traffic transfers are similar to steps 1 through 4 where the destination point code and origination point codes are swapped in sequence. The SCCP addresses change also, but they are not used for routing purposes within the SS7 network. Only the OC Hub uses the SCCP party addresses for routing determination.

The original SCCP Calling Party (O1-VLR-GT) address becomes the new SCCP Called Party Address and the PLMN O2's HLR identifies itself as the new SCCP Calling Party address (O2-HLR-GT) in place of O2 Mobile Station's Mobile Global Title (O2-MGT).

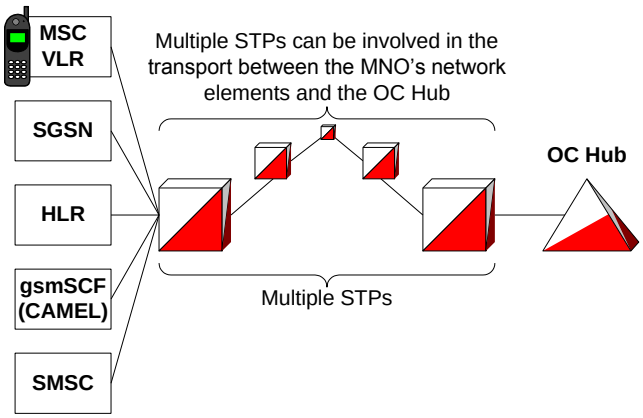

Figure 12: Multiple STP diagram

When multiple signalling transfer points are used, they must all implement the same transport protocol and use the same point code number protocol with the same national/international network indication.

When multiple signalling transfer points are used, they must all implement a route-set definition for every point code involved in the MTP direct routing.

MTP Direct Routing after SCCP

The following diagram shows two (2) PLMNs interconnected via SS7 links with an Open Connectivity Roaming Hub. The signalling network of Operator 1 (O1) contains a node that performs SCCP Global Title translation services (SCCP GT). Global title translation is performed on messages internal to O1 signaling traffic only. This example illustrates the use of MTP Direct Routing as a tunnelling method that is used external to an operator's signalling network. The internal functioning of an operator's network can employ any mechanism the operator chooses – it is only the external signalling where MTP Direct routing is used to move messages to/from an Open Connectivity Roaming Hub.

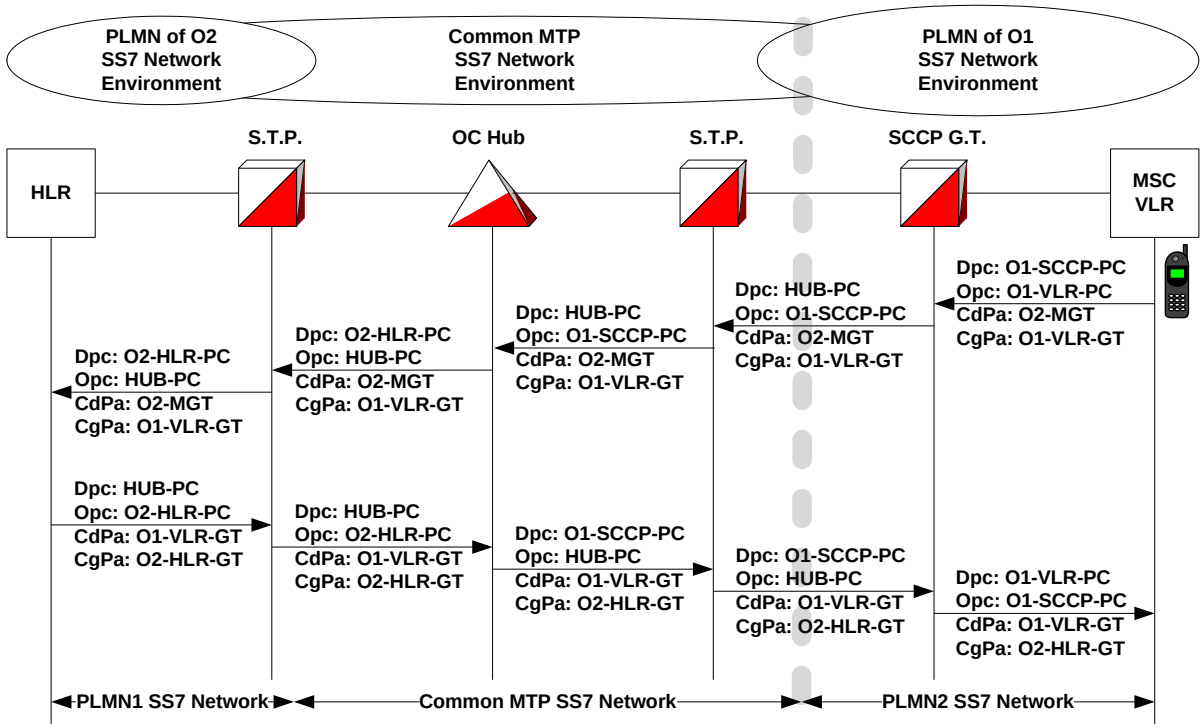

Figure 13: Open Connectivity Roaming Hub

In the example above, a network node (SCCP GT) is used to provide SCCP global ttle routing services to/from the MSC/VLR within the operator's internal signalling network. The SCCP GT service uses MTP direct routing for all MSUs to/from the OC roaming hub.

MTP Direct Routing – Different MNO SS7 Networks

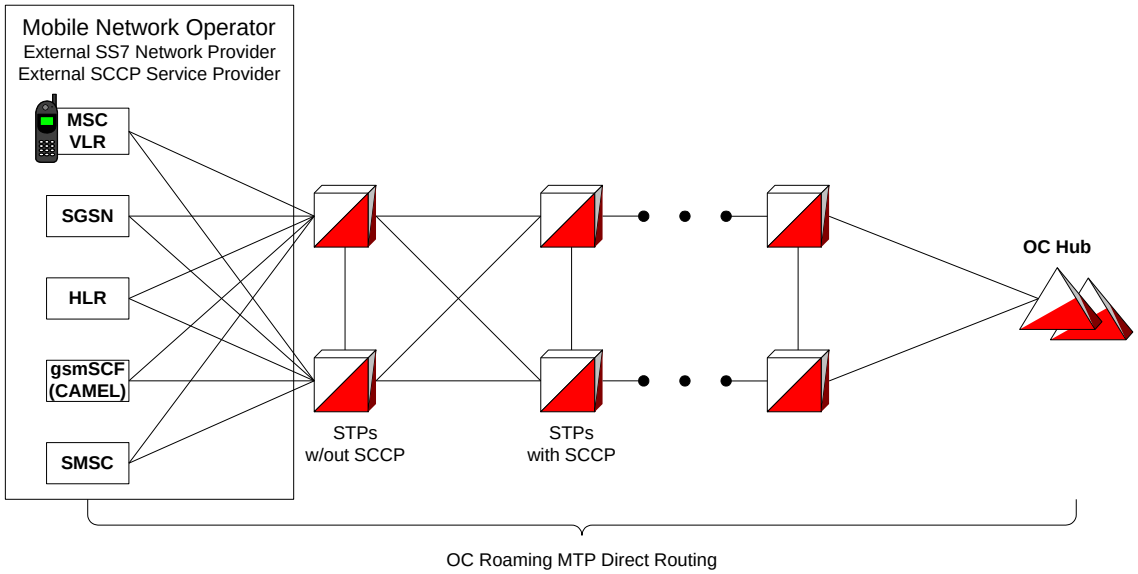

Figure 14: Using a 3rd party SS7 network provider

A simplistic network is shown above. The mobile network operator has chosen to use the services of an 3rd party SS7 network provider. The MTP direct routing is between each of

the MNO's network elements (MSC/VLR, SGSN, HLR, gsmSCF, SMSC) and the OC roaming hub.

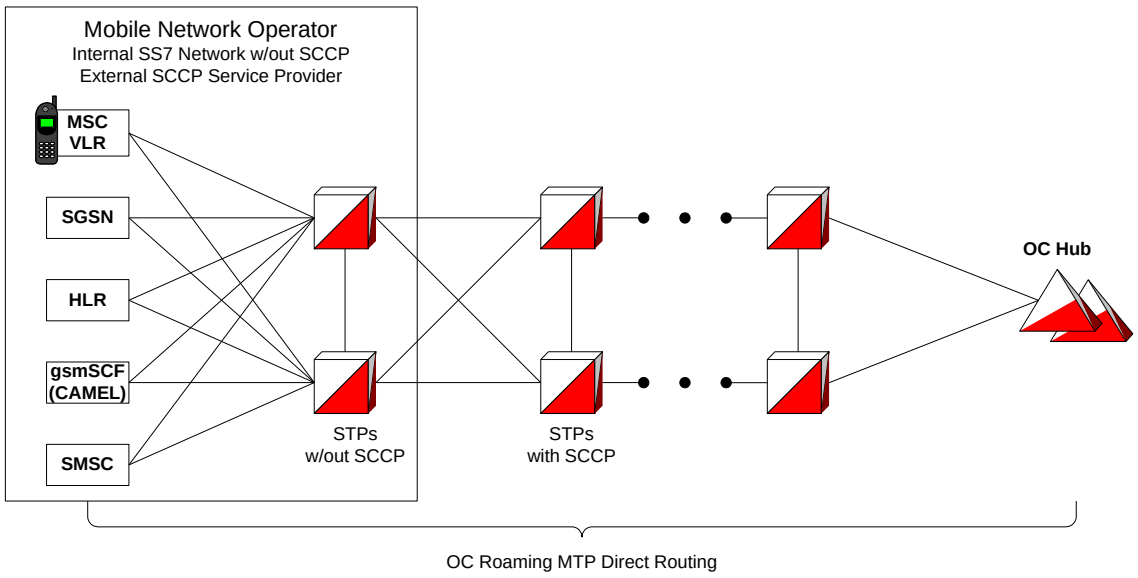

Figure 15: External SCCP routing

In the diagram above, a mobile network operator's network uses internal STPs but does not perform internal SCCP routing. The STPs function primarily as link concentration points. Internal routing uses MTP point codes. As with the simplistic network shown previously, the MTP direct routing is between the MNO's network elements and the OC roaming hub.

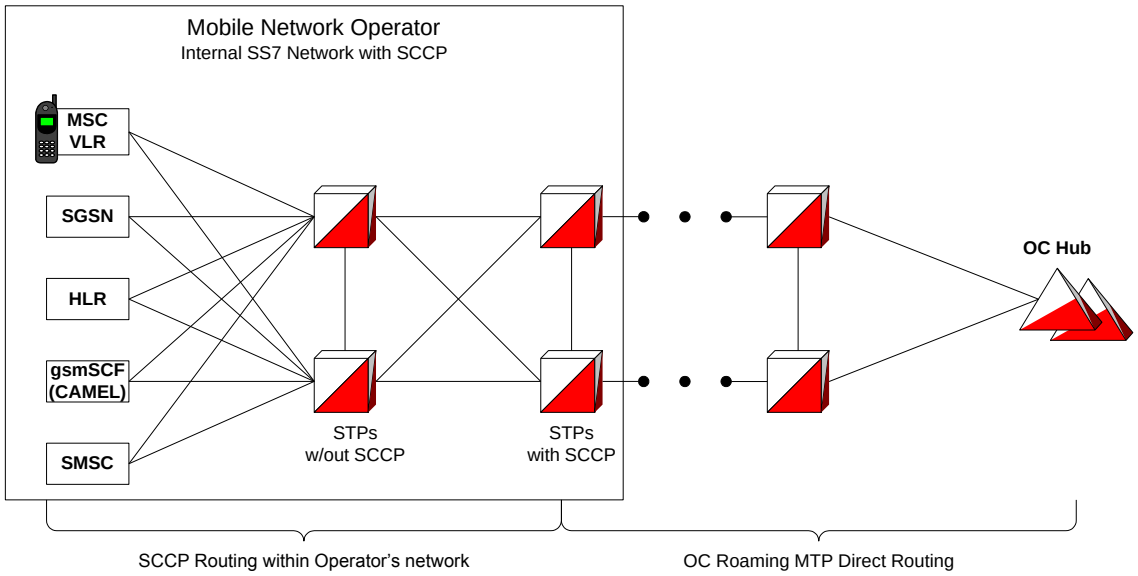

Figure 16: Internal SCCP routing

In the diagram above the mobile network operator has a core network that includes global title routing internally with STPs that provide SCCP services. A set of STPs provides SCCP global title routing services internal to the operator's core SS7 network. The global title

translation STPs provide the traffic separation point where MTP direct routing can be used to/from the OC roaming hub. The MNO's network elements can use SCCP global title routing to/from the core internal Global Title STPs. MTP direct routing is used between the MNO's global title STPs and the OC roaming hub.

Implementation Considerations

General Considerations

General considerations of MTP Direct Routing tend to expose the restrictions that are imposed by this architecture alternative. The relationship between an Open Connectivity Roaming Hub and an operators sending/receiving nodes can be based on MTP direct routing if and only if all network elements involved have the ability to operate with the same protocol definition (ANSI, ITU, China-7, Japan-7) and the same network indication (national, international).

Applicable Environments

Certain operating environments are more suited to this particular set of restrictions than others. World Zone 1 (WZ1) employs an ANSI message transport protocol in a national network identity. Hundreds of operators exist in the same transport protocol definition with the same network indication. This characteristic provides an excellent environment for the use of MTP Direct Routing as an architecture alternative.

Another environment where MTP Direct Routing can be applied is the ITU International signalling layer. The international signalling layer qualifies with a single transport protocol and common network indication. OC roaming hubs can operate with international ITU point codes. Operators can use network elements to function as points of ingress/egress with international ITU point codes. MTP Direct Routing becomes a valid option for these operators and these OC roaming hubs.

MTP direct routing using international signalling point codes becomes a very easy method for inter-hub communications. Route set definitions are required for the hubs point codes in all the network elements needed to support the MTP routing path. The route set definitions are a one-time setup requirement for the international SS7 network providers on behalf of the OC roaming hub providers.

MTP direct routing can be a viable method for remote operators with dedicated facilities to interconnect with a roaming hub. Careful point code planning is required to ensure that point code overlap does not occur.

Restricted Environments

MTP Direct routing is not an optimal choice in certain environments. Operators in countries where an OC roaming hub is not present eliminates the use of national point codes. Operator that do not have or choose not to have international point codes may be restricted from using MTP direct routing. Operators who choose not to provision dedicated facilities to an OC roaming hub may be restricted from using MTP direct routing.

Hub-to-Hub Inter-working

The use of MTP Direct Routing for hub-to-hub interworking can be implemented using an international ITU identity. The use of the international ITU signalling layer has the following benefits:

- The international ITU signalling layer is accessible within every country, usually from multiple providers.
- The number of Open Connectivity roaming hubs will remain small enough to realistically expect that an international ITU point code can be assigned to each one.
- The international signalling transport facilities are in existence today.
- Inter Hub communications can be migrated easily from the International ITU signalling layer to an All-IP environment using SIGTRAN at any time.

Two hubs in the same national SS7 network domain can choose to use national point codes to address one another.

PROs and CONs

PROs

- Full transparency – no changes to SCCP, TCAP, or MAP addressing.
- Almost no impact on the existing service platform
- Existing national facilities can be used where applicable.
- Existing international facilities can be used where applicable.
- Existing International facilities can be used for Hub-to-hub interworking.
- Architecture has immediate benefits in certain national environments.

CONs

- Operator may require international ITU point codes.
- Hub may require International ITU point codes (minimum 2 for redundancy).
- Hub providers must acquire international point codes from the appropriate regulatory bodies and fulfil any legal obligations required by the acquisition.
- MTP direct routing requires a one-time provisioning of routeset definitions for all point codes involved between a client and OC roaming hub. The routesets must be provisioned in all possible signalling transfer points between the hub and the client network elements.

3.5.1

Alternative 2: SUA/SCTP

Brief Synopsis

The objective of the SUA/SCTP architecture is to use IP in evolved GRX or IPX networks to provide transport services between PLMNs and OC Roaming Hubs. The IP transport services are kept separate from the current international SS7 networks to avoid conflicts with existing SCCP address routing used for direct bi-lateral roaming agreements between PLMNs. SUA/SCTP over IP is used as a tunnel for MSU transfer between a mobile network operator's signalling network and an Open Connectivity roaming hub.

Architecture Description

The SUA/SCTP architecture leverages existing capabilities of SS7 within PLMNs, SIGTRAN based signalling gateways, and IP networks of GRX, evolved GRX and/or IPX to transport signalling messages between PLMNs and OC roaming hubs.

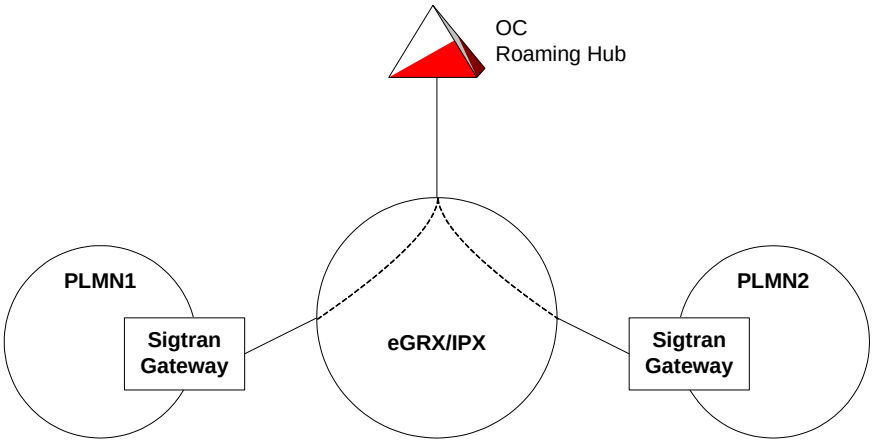

Figure 17: SIGTRAN based signalling gateways

SIGTRAN signalling gateways provide the SS7 connectivity to PLMN STPs, and/or specific MNO network elements such as MSC/VLRs, HLRs, SGSNs, SMSCs, etc. The SIGTRAN signalling gateways operate in parallel with other SCCP translation points such as International SS7 SCCP gateways used for routing existing bi-lateral roaming signalling traffic. The SIGTRAN signalling gateways provide IP connectivity to the OC roaming hubs through the GRX, (e)GRX or IPX networks.

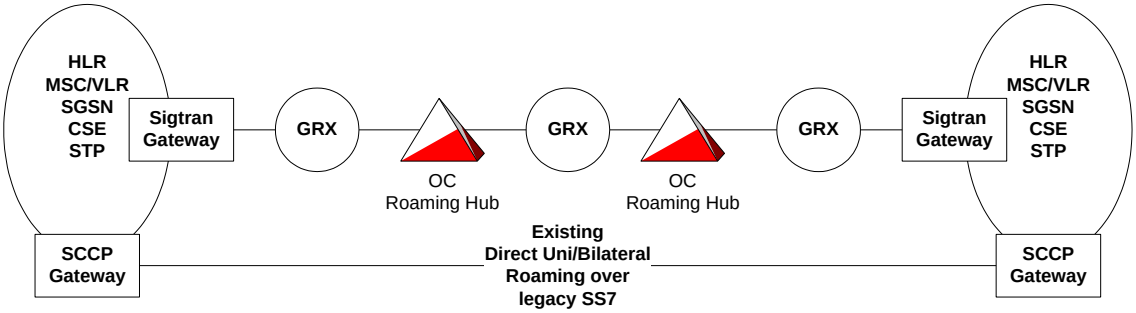

Figure 18: Hub Interworking through a GRX/IPX connection

The GRX, (e)GRX or IPX networks provide a separation of signalling traffic for Open Connectivity transport services from the existing International SS7 network and ISPC domain. The (e)GRX or IPX networks provide a high availability, low latency environment equivalent to the International SS7 network and ISPC domain. By separating the existing direct bilateral roaming traffic from the OC roaming hub traffic, the architectures can operate in parallel. Migration from one network environment to the other is handled by the SCCP translations at Frontier switches, STPs, or gateways.

The experience of the QOS team in the IPX_PCI group (as per recent email from David Goodstein) shows that the current performance of the GRXs are meeting , or close to

meeting the requirements table of IR.34 for Round Trip Time. In summary, they are now comparable to the performance of TDM/legacy SS7 networks.

The GSMA presentation entitled *IPX Validation, Early Indicators from IPX performance Tests, Orange UK <-> Vodafone Australia, version 1.1,* dated *24th August, 2007* contains consist one-way delay and round trip time results. The round trip times from UK to Australia to UK averaged 344 milliseconds.

So while latency remains important, it is solely an issue for the local end-tail dimensioning, and not a generic concern with the SUA/SCTP Architecture. Any references to GRX, evolved GRX [(e)GRX], or IPX networks can be satisfied with the existing GRX networks.

Call Flows

The following diagram shows two (2) PLMNs interconnected via signalling gateways through (e)GRX network. A subscriber from PLMN2 roams into PLMN1 and initiates an MS-Attach resulting in a MAP-Update-Location operation. The contents of the MAP operation are unaffected, and not shown. The SUA/SCTP architecture is an IP based transport service using SCCP based Global Title determination for onward routing.

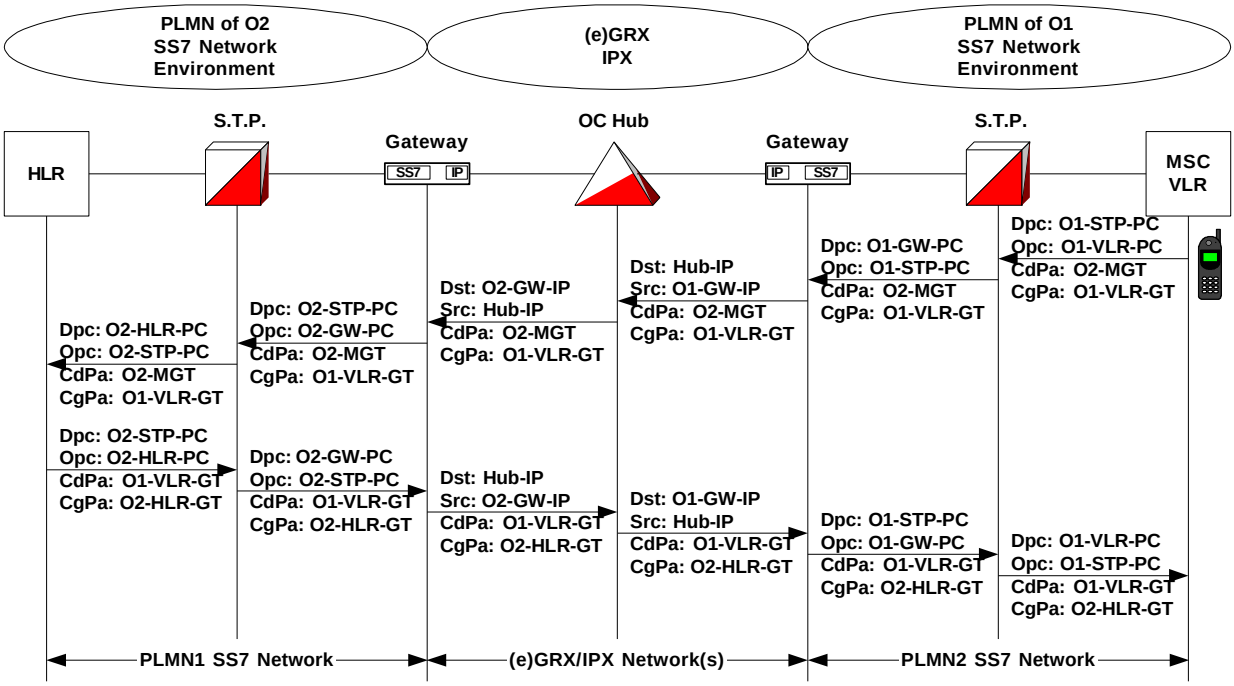

Figure 19: PLMNs using GRX/IPX cpnnection.

Steps:

1. PLMN O1's VLR issues MAP-Update-Location

- SCCP Called Party is GT Routed on Mobile Global Title of the MS (CdPa: O2-MGT)
- SCCP Calling Party is GT Routable on Global Title of the VLR (CgPa: O1-VLR-GT)
- MSU is forwarded to O1's STP (Dpc: O1-STP-PC) from local VLR (Opc: O1-VLR-PC)

PLMN O1's STP performs intermediate Global Title routing with the SCCP Called Party Address and determines that the next network element is the PLMN O1's SIGTRAN Signaling Gateway. The SCCP layer is unchanged and forwarded as received.

MSU is forwarded to O1's GW (Dpc: O1-GW-PC) from O1's STP (Opc: O1-STP-PC)

PLMN O1's Signaling Gateway performs intermediate Global Title routing with the SCCP Called Party Address and determines that the next network element is the Open Connectivity Roaming Hub. The OC Roaming Hub is a SIGTRAN addressable entity, so the SCCP information (which includes the TCAP MAP/CAP) is repackaged in a Connectionless Data packet (as per SUA) and forwarded to the OC Roaming Hub via the (e)GRX/IPX network. The OC Roaming Hub has an SCTP Association with an underlying IP Address. The Hub's IP Address is set as the Destination with the signalling gateway's IP address as the source identity of the packet. The SCCP contents are not functionally changed and forwarded as received with repackaging.

Logical MSU is forwarded to OC Hub (Dst: Hub-IP) from O1's GW (Src: O1-GW-IP)

The Open Connectivity Roaming Hub receiving the SUA Connectionless Data packet uses information within the packet to determine the existence of an OC roaming agreement between the serving and home PLMNs. An OC roaming agreement permits the operation to be forwarded accordingly. The OC Roaming Hub determines the destination of the signalling message based on the Called Party Address (SCCP CdPa) effectively performing intermediate Global Title routing. The determination provides a route to PLMN O2's signalling gateway which has an SCTP association with an underlying IP address. A SUA Connectionless Data packet is constructed, destined to PLMN O2's signaling gateway. The SCCP contents are not functionally changed and forwarded as received with repackaging of the source and destination IP addresses.

Logical MSU is forwarded to O2's GW (Dst: O2-GW-IP) from OC Hub (Src: Hub-IP)

PLMN O2's Signaling Gateway performs intermediate Global Title routing with the SCCP Called Party Address and determines that the next network element is the network local STP (PLMN O2's STP). The STP is a local SS7 addressable entity, so the SCCP information (which includes the TCAP MAP/CAP) is repackaged in an N-UnitData MSU and forwarded to the STP via the local SS7 network. The SCCP contents are not functionally changed and forwarded as received with repackaging to an SS7 MSU.

MSU is forwarded to O2's STP (Dpc: O2-STP-PC) from O2's GW (Opc: O2-GW-PC)

PLMN O2's STP performs intermediate (or final) Global Title routing with the SCCP Called Party Address and determines that the next network element is the PLMN O2's HLR. The SCCP layer is unchanged and forwarded as received.

MSU is forwarded to O2's HLR (Dpc: O2-HLR-PC) from O2's STP (Opc: O2-STP-PC)

The remaining signalling traffic transfers are similar to steps 1 through 6 where the original SCCP Calling Party (O1-VLR-GT) address becomes the new SCCP Called Party Address and the PLMN O2's HLR identifies itself as the new SCCP Calling Party address (O2-HLR-PC) in place of O2 Mobile Station's Mobile Global Title (O2-MGT).

In all of the above steps, the SCCP addressing information (called and calling party address Global Titles, and user information (TCAP MAP) remain unchanged, providing full transparency between the VLR and HLR.

Routing determination is performed in each PLMN network to choose either a gateway for Open Connectivity roaming or an International SCCP provider for existing unidirectional/bidirectional roaming.

Implementation Considerations

General Considerations

Physical connectivity is required to a GRX network. Many MNOs already have access to GRX to support packet switched services.

SIGTRAN signalling gateways need to be put in place if not already present. MNOs that use SIGTRAN as part of their internal core signalling network may already have the necessary gateways. SIGTRAN signalling gateways must be integrated with the existing BGP-GRX infrastructure and PLMN network management.

An MNO that has no existing SIGTRAN infrastructure, nor knowledge of SIGTRAN, may desire their OC roaming hub provider to install, configure and manage the SIGTRAN signalling gateways as an outsourced service.

IR.21 processing will need to differentiate between Open Connectivity roaming versus unidirectional/bidirectional roaming, such that global title routing uses the appropriate gateway.

Routing determination requires an addressable interface point to transition from an SS7 network to a (e)GRX/IPX network. The addressable interface point must have a SS7 point code address and an IP address. It should have the ability to perform SCCP routing determination through the use of global title tables. Global title addresses belonging to the connected MNO will point toward the network elements of the MNO, all other global title addresses will point to the Open Connectivity Roaming Hub.

Several network topologies need to be considered relative to the basic implementation of a signalling gateway and GRX routing path to an OC Roaming hub.

The characteristics of the MNOs signalling network that define the various topologies are as follows:

- STP with SCCP services is internal to / external to MNO's network [Paolo: what is an STP with SCCP service? Is there any other kind?]
- More than 1 pair of STPs with SCCP Services for ingress/egress to network

- Uses international point code or is limited to national point code

Client Considerations

The routing decision point that separates traffic of bi-lateral roaming partners from OC roaming partners shall direct the OC roaming partner traffic to a local SUA/SCTP Gateway.The local SUA/SCTP can be implemented on a local (national) point code to eliminate dependency on international signalling point code availability.

The MNO's internal signaling network may have an IP core, or an SS7 core, or the core may be provided by a third party signalling service, depending upon the sophistication of the MNO.

When the internal signalling network has an IP core, the use of SUA/SCTP is significantly easier to implement, and the MNO may already have the necessary hardware to accomplish the required SIGTRAN connectivity.

When the internal signalling network has an SS7 core, the use of SUA/SCTP may require additional hardware to form the bridge between the internal SS7 signaling network and the (e)GRX network.

The use of SUA/SCTP may require additional hardware to separate signalling traffic of bi-lateral roaming partners from OC roaming partners. This is especially true when the internal signalling network is provided by a 3rd party signalling service. Once separation of signaling traffic is completed, then hardware may be required to bridge the OC roaming partners' traffic to the (e)GRX network via SUA/SCTP.

Roaming Partner Considerations

Same as above.

Hub-to-Hub Inter-working

The use of SUA/SCTP for Hub-to-Hub interworking is an excellent choice since it provides a fully transparent tunnelling path for MSUs to retain all their exact SCCP, TCAP, MAP and CAP components.

PROs and CONs

PROs

Centralised signalling and signalling management are maintained. A cascading signalling flow provides identical message handling relative to existing unidirectional or bidirectional roaming with respect to SCCP, TCAP, MAP, and CAP protocols. With an architecture that does not require or is not dependent upon content manipulation, existing MNO services should not be affected. Such services may include USSD based services, steerage of roaming, SMS welcome, interoperability with SMS hubs, CAP based services, etc.

Introducing an OC roaming hub should have minimal impact on operational areas such as fraud prevention, testing and QoS monitoring, and service troubleshooting.

The SUA/SCTP architecture for OC roaming hubs maximizes transparency and visibility to meet OC requirements.

This architecture provides parallel co-existence with existing signalling routing avoiding any impact to existing unidirectional or bidirectional roaming relationships.

The SUA/SCTP architecture is a move forward to an All-IP network environment aligning it with the future of signalling services. Its direction is consistent with 3GPP adoption of Diameter-based macro-mobility protocols in IMS.

The SUA/SCTP architecture provides a more global solution for signalling hubbing.

The SUA/SCTP Architecture is in alignment with PRD IR.72 providing the benefits of increased bandwidth, decreased cost, easier dimensioning, and increased QoS over existing narrowband SS7 based solutions.

The SUA/SCTP architecture has no explicit requirements for ISPC assignment. The SS7 module of the SGW exists on the national-layer/carrier-specific (thus not requiring ISPC), and the IP module can address the signalling routing/transport in the international network domain without using a point code. Point codes need not be transferred across the SS7/IP GW boundary when using SUA.

The SUA/SCTP architecture’s key components of are available now. The GRX is available in approximately half of the active GSMA operators' networks, either accessed by dedicated transmission links, or via secure tunnels over the internet. A router supporting legacy-SS7 to Sigtran (including SUA) can be sourced from at least one major manufacturer, and routers and protocol-stack "plug-ins" supporting other SIGTRAN protocols can be sourced from a wide selection of vendors. There are no external dependencies on organisations such as ITU-T to assign addresses or address ranges. Extension to new operators who have no GRX is dependent on the availability of Internet to a reliability level consistent with the PLMN's aspiration on the availability of roaming services.

It is considered that The SUA/SCTP architecture can be trialled as soon as a project is sponsored and funded. Full commercial implementation of The SUA/SCTP architecture is possible as soon as GSMA complete contractual and procedural documentation and Hub providers can establish a basis for commercial service.

The SUA/SCTP architecture is ideally suited to those operators with existing access to the GRX, either via direct transmission or via secure tunnels (e.g IPsec) As per IR.34 version 4.1, dated January 2007, section 7.3 states:

The end-to-end SLA [22, Annex] describes the different options for establishing physical connections from a Service Provider to the IPX. Different connection options can be divided into three categories:

- Layer 1 connection (e.g. leased line or fibre) *or*
- Layer 2 logical connection (e. g. ATM, LAN, Frame Relay) *or*
- Layer 3 IP VPN connection over public IP network (IPSec is recommended)

The use by a Service Provider of an Internet IPSec VPN for the local tail is strongly discouraged unless there is no viable alternative.

Operators without GRX capability would need to be access a GRX which can mostly easily be done by arranging a secure tunnel over the public Internet (because the bandwidth requirements are low). SUA/SCTP complements MTP Direct Routing (MTP) and both are "tunnelling solutions" in much the same sense that microwave and fibre are both "transport systems". It has been noted that in Europe that GRX is widely available, but ISPCs (International Signal Point Codes) and the necessary MTP Routeset activations are difficult to achieve. Elsewhere in the world the opposite often holds true. In North America and China the availability of "national" MTP Direct Routing capability is also available to provide "tunnelling".

The SUA/SCTP architecture is equally viable in big and small networks, and supports options on whether the PLMN sources and manages the SS7 router/gateway, or seeks a Hub provider to manage it.

The SUA/SCTP architecture can support multiple gateways for scalability of loading, because they may be stateless at the application level for MAP/CAP/TCAP/SCCP.

The SUA/SCTP architecture can be mixed or integrated with bilateral and hub roaming signalling architectures, with legacy SS7 interworking to International SCCP providers, (and if GSMA can solve the intrinsic separation and MNP issues) with the use of split SMS and Roaming signalling/hub providers. The complexity or sophistication of the mixing is solely a function of the depth of SCCP Called party address analysis undertaken within the PLMN at source nodes, at STPs, at Frontier STP/SCCP gateways and/or at the Sigtran-GRX gateways, and will be part of the combined business plan to reduce the cost of providing roaming services. In other words it is "fully flexible"

The SUA/SCTP architecture is forward compatible with developments such as 3GPP Release 7 functions such as TCAPsec, and the Release 8 Diameter-based Roaming signalling. The position of the Sigtran-GRX Gateway in a PLMN architecture leads to possible integration with Firewalls and proxies.

The SUA/SCTP architecture (and MTP Direct Routing) has no impact on SCCP called and calling party addresses, TCAP addresses, MAP addresses, and so provides absolute transparency to PLMNs.in accordance with OC requirements.

CONs

The following CONs listed are not about the SUA/SCTP Architecture itself but about the range of sophistication that may not yet exist with the mobile Network Operators environment or plans.

- The SUA/SCTP architecture may impact the operational environment of MNOs that do not have existing GRX connectivity.
- The SUA/SCTP architecture may impact the MNOs that do not have SIGTRAN capabilities, or do not have SIGTRAN capabilities in their network plans.
- The SUA/SCTP architecture may require significant testing of the capabilities and interoperability of different type of SGWs that are commercially available.

- The SUA/SCTP architecture implementation may have a longer market adoption timescale based on affected MNOs that have neither GRX nor experience with SIGTRAN.

Alternative 3: SCCP Translation Type (TT)

Brief Synopsis

The objective of the SCCP Translation Type architecture is to use the SCCP Called Party Translation Type value to indicate a specific OC Roaming Hub. SCCP Translation Type (TT) routing is based on standard SCCP operations while the routing decision Of SCCP service providers is changed. SCCP Service Providers alter their routing decisions according to Translation Type. If The SCCP Called Party Address Translation Type is not zero, routing is based on SCCP Called Party Translation Type, otherwise, the existing method of routing is performed with the SCCP Called Party Global Title Address (GT). The TT route is used as a tunnel through existing routing facilities to transfer MSUs between an operator's network elements and an OC roaming hub.

This solution avoids any SCCP/MAP/CAP Address manipulations, translations or modifications.

Architecture Description

SCCP Translation Type routing provides the ability to route SCCP messages to an OC roaming hub based on the called party address translation type. The OC roaming hub routes to the destination MNO of the message based on the called party address global title digits.

Translation Type in ITU Transport

In bi-lateral roaming the common SCCP routing is based on analysis of SCCP called party global title address in the context of the numbering plan (E.164 or E.214) in ITU networks. ITU networks use only one routing table for ISDN addresses. The addresses can be either E.164 [MSISDN & Network Element Address] or E.214 [Mobile Global Title]. Both E.164 and E.214 use the same global title translator service within SCCP. Translation Type is not used because it is not needed to select different GT translators. Both numbering plans use the same service. Since Translation Type is not used in ITU networks currently, it becomes an available discriminator for an alternate routing mechanism for OC Roaming Hubs. ITU networks use a numbering plan indicator to properly identify an E.164 (NP=1) and an E.214 (NP=7).

The following conceptual diagram shows bi-lateral SCCP routing in an ITU network using global title digits (CC…) as routing criteria:

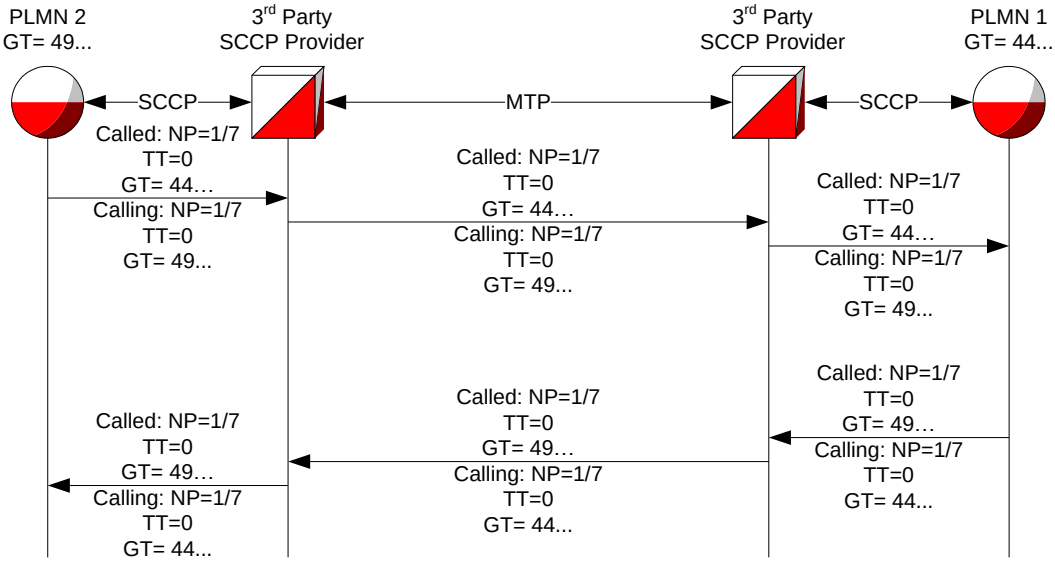

Figure 20: ITU SCCP routing

A roaming hub implementation requires a centralized signalling solution. In this solution the roaming hub should carry all SCCP signalling traffic that is associated with the destination that the roaming hub is managing.

Current SCCP capabilities as described above are not flexible enough in order to integrate a roaming hub while using the standard SCCP routing without any compromises.

In order to overcome the above limitations, the TT based solution is proposed.

In addition to using CC&NDC as criteria for routing, this proposed solution adds the TT as additional mandatory criteria as follows:

1. Each hub shall own a single TT value

- SCCP allows 0-255 values
- Some values are allocated for domestic or specific needs
- GSMA will inform both ITU and ANSI of the use of TT values in the international services range for OC Roaming Hubs.

The unique value of TT will identify a unique Roaming hub. A given hub provider may have multiple hubs with each hub requiring a unique TT value.

When the originating network sends traffic to the roaming hub, it shall use a specific TT value, while the rest of the traffic (bilateral agreements) will be maintained with no changes (i.e. TT=0 or else)

The Hub should forward its own TT value in the SCCP Calling Party to the terminating network for the following two reasons:

1. This will allow the involved MNOs (Roaming Partner or Client) to simply reply to an incoming message; this will ensure the existence of TT=X on the replied message
2. This will allow the recipient to identify the hub involved in the message routing.

The following diagram shows TT routing from one network to another with traffic centralized through the roaming hub. Since the solution is symmetrical the Client can be an Originating network or Terminating Network based on the scenario.

Each SCCP provider in the path between a PLMN and an OC roaming hub must implement a global title translation table to route uniquely for each TT value assigned to an OC roaming hub.

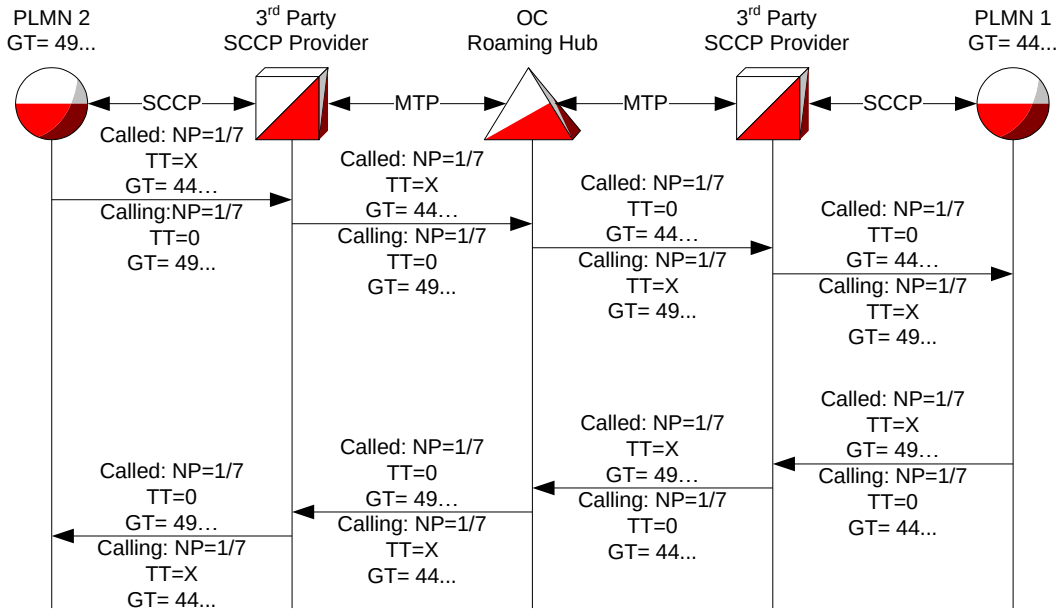

Figure 21: TT routing on a Hub centralized traffic

Translation Type in ANSI Transport

In ANSI networks, common SCCP routing is based on SCCP Called Party Global Title address also, but in the context of Translation Type. ANSI networks use SCCP party global title address definition that does not contain Number Plan (NP) nor Encoding Scheme. ANSI networks use SCCP party global title address definition that contains only translation type and global title digits. The Translation Type is used to determine the correct global title translator. Translation type 9 indicates IMSI analysis (E.212), 10 indicates network element analysis (E.164 Node) and 14 indicates MSISDN subject to Mobile Number Portability (E.164 MS). Note E.214 is not used in ANSI networks. An ANSI network solution requires a distinct TT value for each type (9, 10, and 14) for each OC roaming hub.

In bi-lateral roaming, the originated signalling message uses a TT of 9 indicating IMSI (E.212) in the global title digits of the SCCP called party address. IMSI based routing is typically used with *Send Authentication Information* and *Update Location* operations. The SCCP calling party address of the originated message uses a TT of 10 indicating the node address (E.164) of the originator. The responding node changes the IMSI based global title of the received SCCP called party to the an E.164 address (TT=10) in the SCCP calling party of the responding signalling message. E.212 routing tables are used by the involved SCCP providers for the originated message. The SCCP providers use E.164 routing tables for the responding message.

An example of the current bilateral roaming is shown in the following diagram where TT=9 and IMSI digits are used for SCCP routing in the originated message; TT=10 and E.164 node address are used for SCCP routing in the responding message:

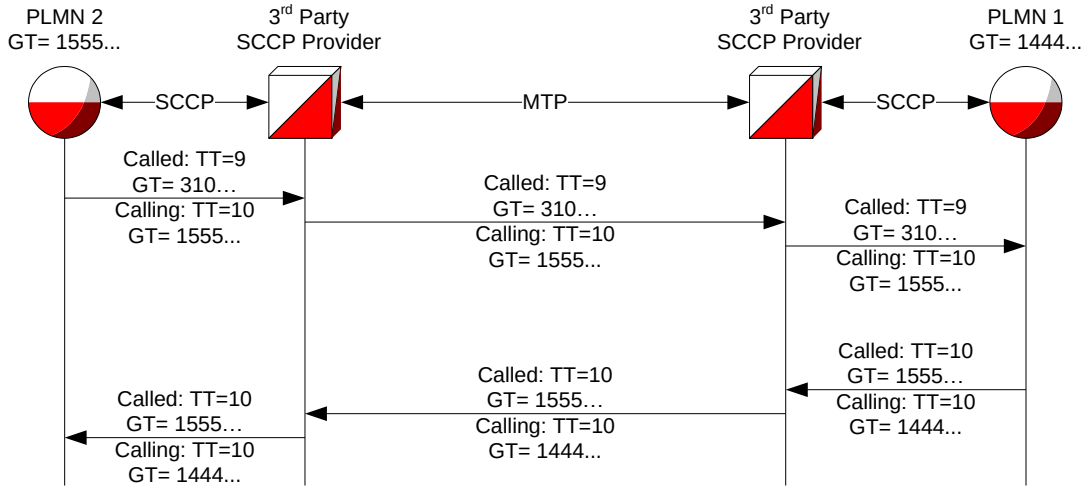

Figure 22: TT=9 use diagram

In the example above, 310… is a USA based IMSI where the TT=9 indicates the use of an IMSI routing table. The GT values of 1555… and 1444… are World Zone 1 network element values where tt=10 indicates the use of an E.164 routing table.

As defined within the ITU transport description above, the roaming hub is a centralized signalling solution. The ANSI transport variant requires the use of a TT value for each unique roaming hub, for each existing TT value in use in the bi-lateral model. The TT value in ANSI transport identifies the number plan (type of digits) contained in the global title address. The roaming hub will need to maintain awareness of the correct type. The roaming hub has routing responsibilities and must be able to use the global title address for routing determination. An IMSI (E.212) global title must not be interpreted as an ISDN address (E.164). The Translation type value conveys address information that must not be lost when using the TT values to indicate routing to an OC roaming hub.

When TT values are assigned to a unique roaming hub, one value <Xi> shall be associated with TT=9 IMSI [E.212], and one value <Xn> shall be associated with TT=10 ISDN [E.164].

The following diagram depicts the SCCP party address use of Translation Type values for signalling messages that transit an OC roaming hub in an ANSI network:

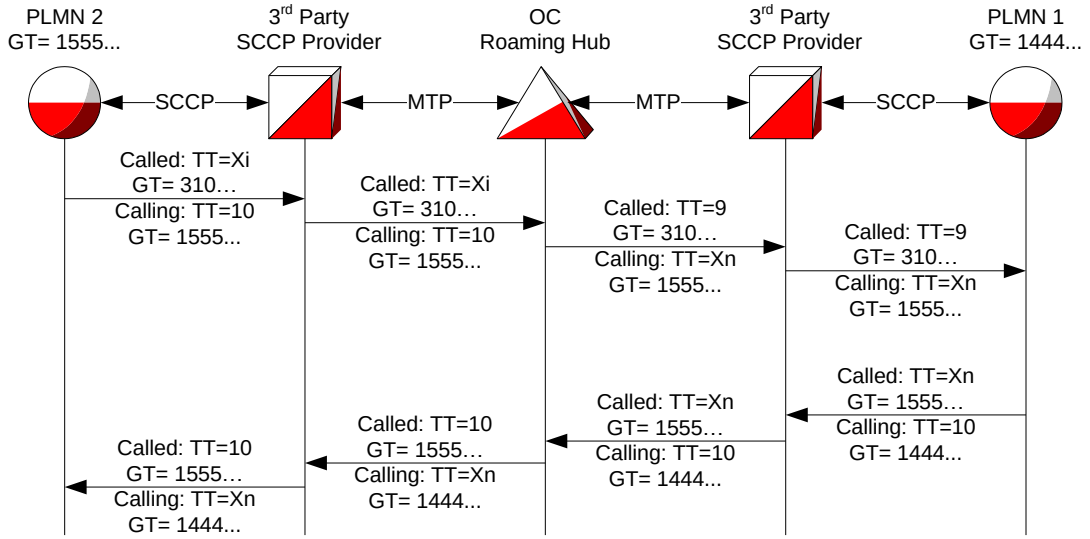

Figure 23: Translation Type values for signalling messages

Call Flows

The following call flow provides information about Location Updating Procedure of MAP 29.002 using TT routing. This flow reflects the routing concept therefore all MAP and CAP procedures apply the same.

Client Operator as HPMN

The following flow provides information about the exchange of signalling messages between a Client operator (O2) as HPMN and Roaming Partner (O1) as VPMN using Translation Type based routing.

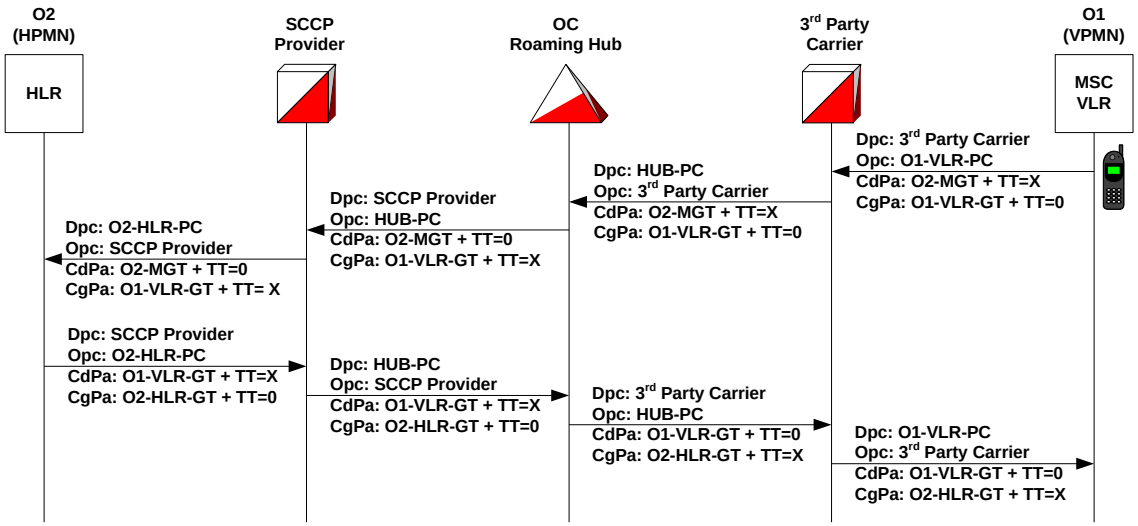

Figure 24: Translation Type based routing.

The diagram above shows point codes of the MTP routing label DPC is the Destination Point Code and OPC is the Originating Point Code. It also shows the SCCP Part Addresses,

assuming an ITU network environment where TT=0 indicates route selection according to existing procedures, and TT=X denotes the route selection to the OC Roaming Hub.

Operator 1 (VPMN) follows existing procedures for a bi-lateral roaming agreement to implement routing to Operator 2 (HPMN), with one exception. Each network provisioned address (E.214 and E.164) requires the translation type to be set to <X> indicating the OC Roaming Hub.

Operator 2 (HPMN) follows existing procedures to implement routing to Operator 1 (VPMN) with the same exception. Each network provisioned address (E.164) requires the translation type to be set to <X> indicating the OC Roaming Hub.

This flow concentrates on the first message sequence and functions the same for the rest of this TCAP transaction. The same philosophy applies to all TCAP and CAP signalling messages.

Steps:

1. PLMN O1's VLR issues MAP-Update-Location

    - SCCP Called Party is GT Routed on Mobile Global Title of the MS (CdPa: O2-MGT) with the Translation Type (TT=X) set to the value associated with the Roaming Hub.
    - SCCP Calling Party is GT Routable on Global Title of the VLR (CgPa: O1-VLR-GT)
    - The MGT entry in VLR indicates that the MSU should be forwarded to the existing International SS7 network provider (3rd Party Carrier). The MTP Routing Label is constructed with the destination point code of 3rd Party Carrier's STP and the originating point code of O1-VLR-PC.
    - The MSU is forwarded over physical links to 3rd Party Carrier's STP (Dpc: 3rd Party Carrier) from local VLR (Opc: O1-VLR-PC)

3. 3rd Party Carrier's STP performs intermediate Global Title routing with the SCCP Called Party Address. The presence of the TT=X value in the called party address will select a route to the OC Roaming Hub point code. The next network element is the OC Roaming Hub. The SCCP layer is unchanged and forwarded as received. MSU is forwarded to OC Roaming Hub (Dpc: HUB-PC) from 3rd Party Carrier's STP (Opc: 3rd Party Carrier)
3. The Open Connectivity Roaming Hub uses information within the received MSU to determine the existence of an OC roaming agreement between the serving and home PLMNs. An OC roaming agreement permits the operation to be forwarded accordingly. The OC Roaming Hub determines the destination of the signalling message based on the Called Party Address (SCCP CdPa) without regard to the TT=X value. Effectively, the hub is performing intermediate Global Title routing.

The determination provides a point code route to PLMN O2's chosen SCCP provider. The SCCP party addresses are changed to reflect the different TT values required when onward routing the MSU. The called party address TT value is set to 0 (ITU network), and the calling party address TT value is set to X, the value for TT routing to the OC Roaming Hub.

A routing label is constructed for the MSU, destined to the SCCP Provider. The TCAP contents are not changed and forwarded as received with repackaging of the routing label origination and destination point codes, and the SCCP changes described above.

MSU is forwarded to SCCP Provider's STP (Dpc: SCCP Provider) from OC Hub (Opc: Hub-PC)

3. SCCP Provider's STP is the MTP addressed entity, so it performs intermediate (or final) Global Title routing with the SCCP Called Party Address and determines that the next network element is the PLMN O2's HLR. The SCCP layer is unchanged and forwarded as received.
   MSU is forwarded to O2's HLR (Dpc: O2-HLR-PC) from SCCP Provider's STP (Opc: SCCP Provider)
3. PLMN O2's HLR responds to the MSU, placing the received SCCP calling party address in the SCCP called party address on the outbound MSU. The SCCP calling party address of the outbound MSU is set to the global titl value of the network element issuing the MSU (PLMN O2's HLR). Depending upon the actual implementation of the network element, it may reconstruct the SCCP called party address from routing information associated with the far end global title address digits. The network element will need the routing information to the far end GT address to indicate the use of a TT value other than the default of 0. Specifically, the address must be constructed with a TT value of X.

Note: If PLNM O2's network uses an internal STP with SCCP routing services, the far end addresses can be configured to perform a global title change to the SCCP called party address by setting the TT=X.

MSU is forwarded to SCCP Provider (DPC: SCCP Provider) from O2's HLR (OPC: O2-HLR-PC)

3. SCCP Provider's STP performs intermediate Global Title routing with the SCCP Called Party Address. The presence of the TT=X value in the called party address will select a route to the OC Roaming Hub point code. The next network element is the OC Roaming Hub. The SCCP layer is unchanged and forwarded as received.
   MSU is forwarded to OC Roaming Hub (Dpc: HUB-PC) from SCCP Provider's STP (Opc: SCCP Provider).
3. The OC Roaming Hub performs an internmediate global title translation using the SCCP Called Party Address digitswithout the effect of the TT=X. The SCCP party addresses are changed to reflect the different TT values required when onward routing the MSU. The called party address TT value is set to 0 (ITU network), and the calling party address TT value is set to X, the value for TT routing to the OC Roaming Hub.
   MSU is forwarded to 3rd Party Carrier's STP (Dpc: 3rd Party Carrier) from OC Hub (Opc: Hub-PC)
3. 3rd Party Carrier's STP is the MTP addressed entity, so it performs intermediate (or final) Global Title routing with the SCCP Called Party Address and determines that the next network element is the PLMN O1's VLR. The SCCP layer is unchanged and forwarded as received.

MSU is forwarded to O1's VLR (Dpc: O1-VLR-PC) from 3rd Party Carrier's STP (Opc: 3rd Party Carrier).

Implementation Considerations

General Considerations

Implementing the TT routing allows integration of Roaming Hub without the need of address manipulation, maintaining them in a full transparent manner identical to the existing bi-lateral transparency..

The only drawback of such solution is the need of TT routing capabilities in the SCCP provider's service (Client's & Roaming Partner).

Client Considerations

The following actions should be taken by the client operator in order to use this solution:

1. The client operator wishes to connect a roaming hub should send the associated traffic based on the following logic:

SCCP Called Party Address prefixes	Numbering Plan	Translation Type Value	Destination
0x – 9x (all GT range)	7 (E.214), 1(E.164)	X (HUB ID)	Local SCCP Provider
0x – 9x(all GT range)	7 (E.214), 1(E.164)	0	Local SCCP Provider

Table 1:Local SCCP provider solution

TT change from 0 to X should be done in the MSC/VLR of the client per roaming partner (alternatively this can be done at the GMSC/SCCP node)

3. The client operator should inform its SCCP provider to implement the following:

SCCP Called Party Address prefixes	Numbering Plan	Translation Type Value	Destination
0x – 9x (all GT range)	7 (E.214), 1(E.164)	X (HUB ID)	Roaming Hub PC
0x – 9x(all GT range)	7 (E.214), 1(E.164)	0	Roaming Partner (Bilateral)

Table 2: HUB and Bilateral solution

3. The client operator should ask its SCCP provider to ensure that the TT = X is maintained in the onward MTP3 routsets towards the roaming hub (if any).
   For further details please refer to Call flow section **Error! Reference source not found.**

3.4.3.4.2 Roaming Partner Considerations

Roaming partner considerations are the same as the client ones as detailed in section

3.5.1.1.1 PROs and CONs

PROs

1. Full Transparency without any address changes
2. No Coverage issues – uses SCCP routing capabilities and allows in-direct routing
3. No implications on:

- GSM service such as: Voice, SMS, MMS, CAMEL, GPRS, 3G (DATA & VT), USSD, SS, VHE (SC, Dialling Corrections), VPN, SOR, WSMS etc.
- 3rd party service in the network such as: SMS Anti-Fraud/Spam, Voice Anti-Fraud, Real-time monitoring systems, Reporting etc.
- Billing systems
- Each hub owns an ID – TT value per hub
- TT routing allows the MNOs involved to identify with real-time monitoring the HLR, VLR, and a hub identity.
- TT routing allows the MNO to control and separate SMS I/W from SMS Roaming
- The SMSC shall send SMS I/W traffic (MOForwardSM) using TT=0
- While rest of traffic (from VLR/HLR/SCP etc.) will be sent using TT=X

CONs

1. Requires TT translation capabilities at the MNO (Client or Roaming Partner) side (commonly used at the VLR/MSC/GSMC)
2. Requires TT routing criteria at the SCCP provider side
3. Requires TT manipulation at the Roaming Partner side
4. Network elements at either end of a relationship where TT is used may not be able to understand, distinguish or set TT.
5. Only ITU SCCP layer sets the Translation Type to 0. ANSI (used in World Zone 1) makes explicit use of Translation Type to denote the difference between an IMSI, node address, and MSISDN.

The following extract from section 6.1.3.1 Introduction [of SCCP addressing within Use of SCCP] in 3GPP TS 29.002 version 4.9.0 Release 4 document states:

“If ANSI T1.112 SCCP is used, the format and coding of address parameters carried by the SCCP for that purpose shall comply with ANSI specification T1.112 with the following restrictions:

1) Intra-PLMN addressing

For communication between entities within the same PLMN, a MAP SSN shall always be included in the called and calling party addresses. All other aspects of SCCP addressing are network specific.

2) Inter-PLMN addressing

a) Called Party Address

- SSN indicator = 1 (MAP SSN always included);

- Global title indicator = 0010 (Global title includes translation type);

- the Translation Type (TT) field will be coded as follows:

TT = 9, if IMSI is included;

TT = 14, if MSISDN is included;

Or TT = 10, if Network Element is included.

(If TT=10, then Number Portability GTT is not invoked,

if TT=14, then Number Portability GTT may be invoked).

- Routing indicator = 0 (Routing on global title);"

3.5.2 Alternative 4: Alias GT

Brief Synopsis

Alias GT (AGT) is proposed for the purpose of achieving an easy way to implement OC Roaming Hub method. It solves the obstacle found with the GT prefix method and the maximum length of 15 digits for E.164 addresses.

Introduction of AGT addresses several concerns that have been highlighted with GT Modification methods. AGT stands for a GT that is only valid when roaming via hub(s). AGT has a unique mapping to real GT and uniquely identifies any network node that is addressable by GT. The Alias GT is structured in such a way that the concerned operator, node and the hub can be identified for signaling between the MNO and hub. AGT method enables same level of AAA as required for Steering Of Roaming and Screening/Blocking of SMSC GTs and location based services. The introduction of the AGT will not have any adverse impact on the MNO's exiting roaming implementation process.

This model provides global roaming to client operators with minimum effort in both client operators and roaming partners. Only Hub number ranges will need to be configured. In case the Hub is a mobile network, all its roaming partners and their IGPs will already have those ranges configured.

Architecture Description

AGT based hub architecture involves assigning an Alias GT to each network node in a client MNO network. The AGT is only valid when roaming through an Open Connectivity hub. The hub is responsible for providing the AGT mapping to real GT's and implementing the GT replacement and reverse mapping functionality as described as described in the AGT Format definition, below.

The following diagram shows the standard SCCP and MTP routing used to deliver signaling messages to and from the OC roaming hub. As noted in the diagram, the VPMN operator loads and uses alias addresses for all HPMN network elements. Likewise, the HPMN operator loads and used Alias addresses for all VPMN network elements. The VPMN always identifies its network elements to the OC roaming hub with true addresses, and the HPMN identifies to the hub its true addresses.

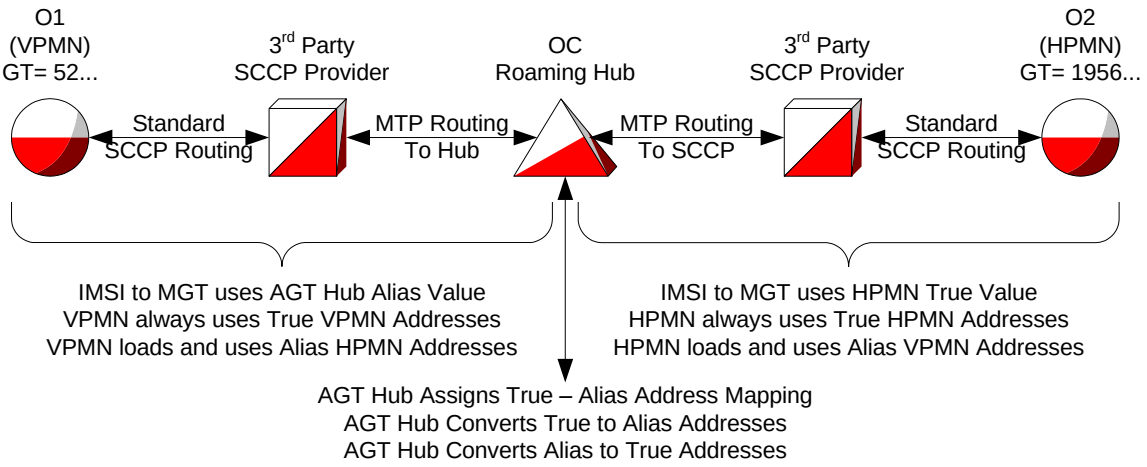

Figure 25 Roaming Hub standard SCCP and MTP routing

- AGT format
- For the purpose of constructing the AGT format, the following terms are introduced.
- HUB Identifier (HI)
- The HI uniquely identifies the hub (At least E.164 CC + NDC).
- Operator Identifier (OI)
- The OI uniquely identifies the operator.
- Network Node Identifier (NNI)
- The NNI uniquely identifies each GT addressable network node on the operator's network.
- OI and NNI together uniquely identify the network node globally.
- AGT length: HI + OI + NNI ≤ 15 digits
- For any method it is recommended to use the full 15 digits and have fixed length each identifier for clear mapping.
- Identifier length considerations
- Length of HI:

Due to current E.164 allocation it is considered unlikely that minimum length for CC+NDC can be less than 5 digits for multiple hubs. The OC hub's would need to have a CC-NDC assigned to them. As an alternative, if it is not possible for most potential operators to have a unique CC-NDC assigned it may be possible to introduce a new CC+NDC specifically for Roaming hubs (and SMS hubs). At least as an alternative for hubs that may not have access to large number ranges in their country.

E.g. the CC 888 (currently reserved by ITU for future global service) could be used.

Assuming total 5 digits it would allow for 99 roaming hubs, in addition current CC+NDC ranges.

Note: It is to be noted that a separate CC and NDC is NOT *a requirement for the AGT method*

- Length of OI:
- Using existing OI like CC-NDC or CC-MNC could be beneficial, but may also be considered as limiting for the intended purpose.
- Currently there are ~900 operators, likely to break the 1K barrier soon. Therefore at least 4 digits are needed for OI.
- Length of NNI:
- It is known that networks have over 1000 GT addressable nodes on their networks and it is possible that some have over 10000.
- Example Options for AGT construction**:**
- HI – OI - NNI
- 7 – 4 – 4
- 7 – 5 – 3

Many hubs can get 7 digit CC-NDC values. New CC allocation from ITU not strictly required.

A hub service provider could allocate more than one OI to operators with more than 999 or 9999 NNIs

Since the use of Alias Global Title is limited to the Operator to – Hub interface, the exact format of the Alias Global Title is an between the roaming hub service provider and the operator. However, since the AGT values will be seen externally by any entity that may query an HLR for a mobile station's location, the value should be standardized.

It is recommended that one AGT format with fixed HI,OI,NNI be decided so as to ensure a consistent implementation on hubs using the AGT method.

Example:

[6-5-4] format: 628745-01033-0142

[7-4-4] format: 3543357-0004-0040

[5-5-5] format: 88808-00002-00087

AGT Roaming Hub will set up a method to publish the mapping between Real and modified GTs as p.e. throught a secure internet web page. User and password will be distributed by the publishing hub to its clients. Access to third parites involved could be granted if needed.

3.5.1.1 Call Flows

Alias GT is based on a one-to-one mapping between a True E.164 address and an Alias address that can be routed as an E.164.

The Roaming Hub using AGT will require a pre-configured translation table for E.164 addresses. The call flow in this section use an example address mapping table as follows:

Alias Global Title Components			True E.164	Node Type
HUB Id	Operator Id	Node Id		
3925411	0504 (Viking)	0047	35-465-00011	MSC
3925411	0504	0123	35-465-00012	VLR
3925411	0051 (SFR)	0423	33-609-443-3221	HLR
3925411	0051	0881	33-609-443-5501	CAMEL SCP
3925411	0051	0882	33-609-443-5502	CAMEL SCP
3925411	0051	0333	33-609-443-3000	SMSC

Table 3: Example Address Mapping Table:

3.5.1.1.1 Location Management Call Flow

In this call flow example the visited network is Viking Wireless Iceland with an operator identifier of 0504, assumed to be assigned by GSMA.

The home network is SFR with an operator identifier of 0051 assigned by GSMA.

The addresses are shown in the diagram as either <True E.164> or <H-O-N as E.164> where H-O-N is Hub-Operator-Node identifiers that comprise an Alias address.

The call flow diagram does not include STPs nor SCCP service providers since they perform standard SCCP routing services as currently exist within such entities. These entities will exist in actual use but are not shown for purposes of simplification.

The IMSI (E.212: 208-10-1234567890) is converted to a Mobile Global Title (E.214) where the MCC-MNC (208-10) is converted to the Hub Id (3925411) and the MSIN is truncated to the leading 8 digits, inorder to maintain a maximum of 15 digits for the Mobile Global Title.

In this example the Mobile-Station is a CAMEL based subscriber with Mobile Originated Call CAMEL control and Supplementary Services CAMEL control.

The following diagram depicts the call flow of an *Update-Location* operation with an embedded *Insert-Subscriber-Data* operation. The flow shows the signaling as it traverses an Alias GT Roaming Hub which performs all necessary SCCP/MAP/CAP address manipulation.

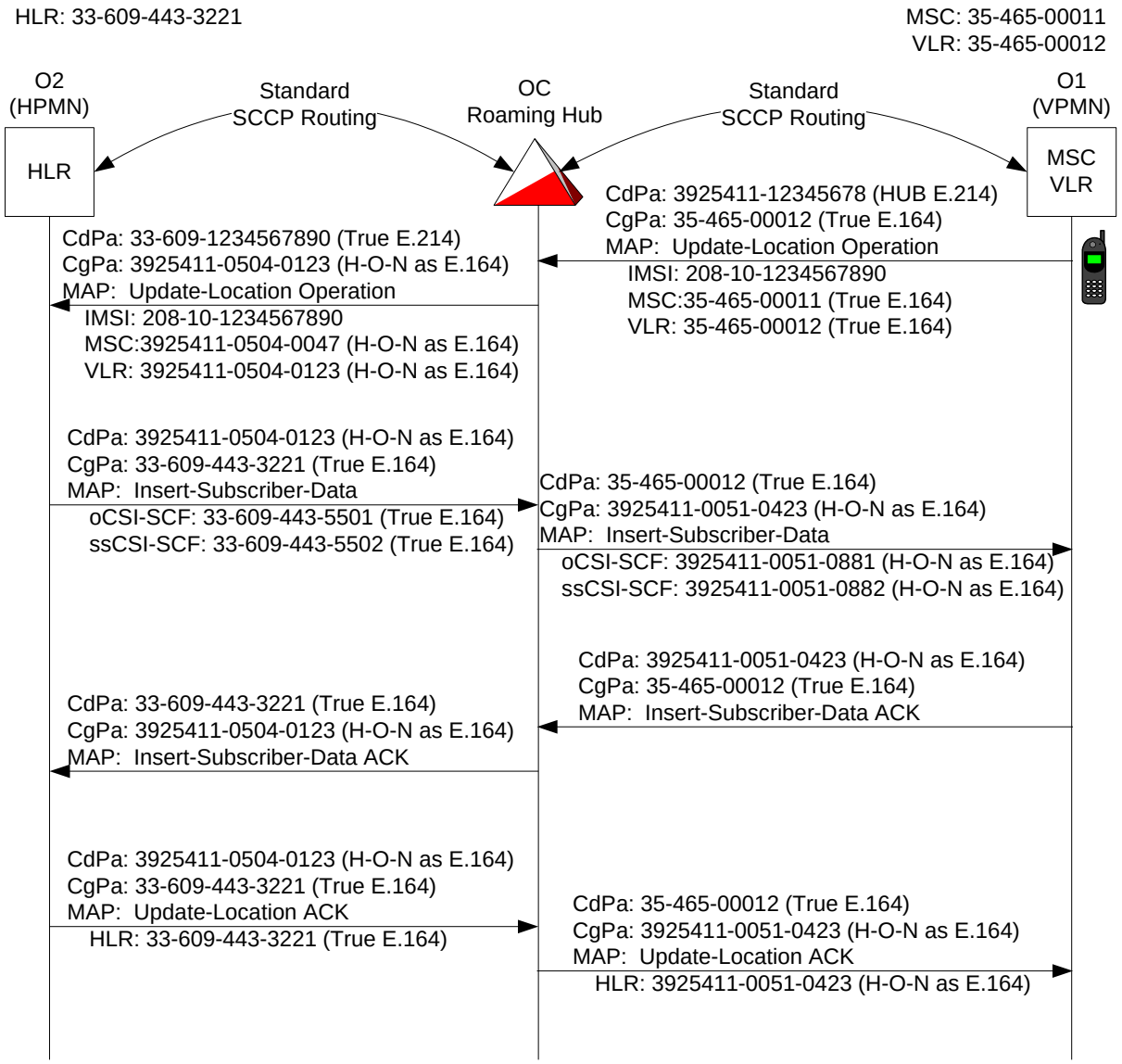

Figure 26: UL operation with an embedded Insert-Subscriber-Data operation

Steps:

1. PLMN O1's VLR issues MAP-Update-Location

- MSC/VLR constructs Mobile Global Title (MGT) from IMSI using HubId (3925411) to replace MCC-MNC (208-10). The resulting digit string is longer than 15 digits so it is truncated to 15 digits maximum.
- SCCP Called Party is GT Routed on Mobile Global Title of the MS (CdPa: HUB E.214)
- SCCP Calling Party is GT Routable on Global Title of the VLR (CgPa: True E.164)
- The GT entry indicates that the MSU should be forwarded through the normal SCCP service providers (not shown) and SS7 network providers (not shown) which route the MSU to the OC Roaming Hub.

The OC Roaming Hub has responsibility to map various addresses from Hub Alias values to True values and from True values to alias values.

The SCCP Called Party address to be routed forward must become a true E.214 based on the IMSI. The received called party address is a Hub based E.214 MGT with information loss. The IMSI value from the TCAP package is used to construct a correct MGT value (True E.214) in the outbound MSU.

The SCCP Calling Party Address to be routed forward must become an Alias GT of the True VLR address. The True VLR address is located in an address mapping table, and the one-to-one matching alias value is substituted in the outbound MSU. The Alias value is a Hub-Operator-Node (H-O-N) value treated as an E.164 address.

The TCAP package is opened and each E.164 network element address (True E.164) within the package is located and substituted with its matching Alias H-O-N as E.164 value. In this particular case, the E.164 network element addresses present are MSC and VLR.

The resulting outbound MSU's SCCP layer has a True E.214 called party address, an Alias GT calling party address. The MSU's TCAP layer has an Alias for the MSC address, and an Alias for the VLR address.

The MSU is forwarded through the normal SCCP service providers (not shown) and SS7 network providers (not shown) which route the MSU to the Home operator's HLR.

2. PLMN O2's HLR receives the MSU, stores the alias MSC and VLR addresses for the given IMSI, and responds with an Insert-Subscriber-Data operation. The HLR indicates that the IMSI is subject to CAMEL control by providing Originating CAMEL Subscription Information (oCSI) and supplementary services CAMEL Subscription Information (ssCSI) in the subscriber data. The CAMEL subscription information contains the E.164 address of the CAMEL gsmSCF (SCP) in True E.164 form.

The responding MSU's SCCP called party address is reflected from the original calling party address (Alias GT of the originating VLR). The calling party address is set to the HLR's True E.164 address.

The MSU is forwarded through the normal SCCP service providers (not shown) and SS7 network providers (not shown) which route the MSU to the OC Roaming Hub.

3. The OC Roaming Hub handles the responding MSU by mapping various addresses from Hub Alias values to True values and from True values to Alias values.

The received SCCP called party address is an Alias GT E.164 of the True VLR. The Alias E.164 VLR address is located in an address mapping table and the matching True E.164 VLR address is substituted in the outbound MSU.

The received SCCP calling part address is a True E.164 HLR address which is substituted with its matching Alias GT address from an address mapping table.

The TCAP package is opened and each E.164 network element address (True E.164) within the package is located and substituted with its matching Alias H-O-N as E.164 value. In this

particular case, the E.164 network element addresses present are gsmSCF addresses within the two CAMEL subscription information parameters (oCSI and ssCSI)

The resulting outbound MSU's SCCP layer has a True E.164 called party address, an Alias GT calling party address. The MSU's TCAP layer has an Alias for the oCSI gsmSCF address, and an Alias for the ssCSI gsmSCF address.

The MSU is forwarded through the normal SCCP service providers (not shown) and SS7 network providers (not shown) which route the MSU to the visited operator's VLR.

4. PLMN O1's VLR accepts and retains the subscriber data and responds with an acknowledgement to the Insert-Subscriber-Data operation.

The resulting outbound MSU has the SCCP party addresses reversed from the received MSU. The received SCCP called party address becomes the outbound calling party address and the received calling party address become the outbound MSU's called party address. The called party address is an Alias GT of PLMN O2's HLR.

The MSU is forwarded through the normal SCCP service providers (not shown) and SS7 network providers (not shown) which route the MSU to the OC Roaming Hub.

5. The OC Roaming Hub relays the received MSU from the O1's VLR to O2's HLR. The SCCP addresses are modified from Alias GT of HLR to True HLR, and True VLR to Alias GT of VLR.

The OC Roaming Hub inspects the contents of the TCAP and finds no addresses that require True-Alias mapping.

The MSU is forwarded through the normal SCCP service providers (not shown) and SS7 network providers (not shown) which route the MSU to the Home operator's HLR.

6. PLMN O2's HLR receives the acknowledgement to the Insert-Subscriber-Data operation, determines that no other intermediate operations are required and constructs a response to the original Update-Location operation.

The result of the Update-Location contains the HLR E.164 address as a mandatory parameter when the operation is successful.

The resulting outbound MSU has the SCCP party addresses reversed from the received MSU. The received SCCP called party address becomes the outbound calling party address and the received calling party address become the outbound MSU's called party address. The called party address is an Alias GT of PLMN O1's VLR.

The MSU is forwarded through the normal SCCP service providers (not shown) and SS7 network providers (not shown) which route the MSU to the OC Roaming Hub.

7. The OC roaming Hub relays the result of the Update-Location operation from O2's HLR to O1's VLR. The SCCP addresses are modified from True E.164 of HLR to Alias GT of HLR and from Alias GT of VLR to True E.164 of VLR.

The OC Roaming Hub opens the TCAP package, determines the True HLR E.164 in the result and substitutes its Alias GT address based on the matching entry in an address mapping table.

The MSU is forwarded through the normal SCCP service providers (not shown) and SS7 network providers (not shown) which route the MSU to the visited operator's VLR. The VLR completes the transaction and retains the Alias HLR address in association with the newly attached IMSI.

3.5.1.1.1 Mobile Originated SMS

3.5.1.1.2 VPMN loading SMSC Alias GT Addresses

True E.164 SMSC Addresses are programmed on SIM cards. The True E.164 SMSC address is sent to the serving MSC as the Destination Address (SM-RP-DA) over the air interface as part of a SUBMIT-SM request. The SUBMIT-SM request becomes a MO_FORWARD_SM from the serving MSC to the destination SMSC in the application context of a ShortMsgMO-Relay.

PLMN O1 (VPMN) must set up a mechanism to ensure the proper handling of MO_Forward_SM. Hub is responsible to provide the VPMN with the mechanism.

3.5.1.1 Implementation Considerations

3.5.1.1.1 General Considerations:

- All AGT compliant hubs need to have CC-NDC of 7 digits to be used as Hub ID.
- HUBs need to maintain the GT-AGT mapping and implement the logic for GT replacement and reverse lookup
- All network nodes in IR21 for operators using HUB based roaming need to have a corresponding AGT
- All value added roaming service implemented at the PLMN that rely on GT will need to consider AGT as the network node GT

3.5.1.1.1 Client Considerations

3.5.1.1.1.1 As HPMN

As HPLMN the client operator will need to consider the following:

- The only GT maintenance needed on the roaming partner side will be for the Hub's AGTs.
- For implementation of Steering of Roaming and other Value added services reliant on GT availability, AGT will identify the visited network range/node instead of the real GT.

3.5.1.1.1.2 As VPMN

- Client MNOs will be asked to implement IMSI ranges from those Hub's clients they would like to receive roamers from. All these IMSI ranges will be translated into a single Hub MGT for minimum GT O&M on the roaming partner side. AGTs will have to be configured instead of the real ones in GT-based services.

- To ensure centralized signaling through the hub the VPLMN will perform GT translation on the HPLMN SMSC address to MNO-AGT for SMSC. This is required as the SIM cards from HPLMN need to have the same SMSC address for hub based and bilateral roaming. If VPLN cannot perform this GT translation VPLMN could route the SMSC address directly toward the Hub.

3.5.1.1.2 Roaming Partner Considerations

3.5.1.1.2.1 As HPMN

- For implementation of Steering of Roaming and other Value added services reliant on GT availability, AGT will identify the visited network range/node instead of the real GT.

3.5.1.1.2.2 As VPMN

- E212-E214 Translation will be performed as IMSI⇒ hub MGT
- To ensure centralized signaling through the hub the VPLMN will perform GT translation on the HPLMN SMSC address to MNO-AGT for SMSC. This is required as the SIM cards from HPLMN need to have the same SMSC address for hub based and bilateral roaming. If VPLN cannot perform this GT translation VPLMN could route the SMSC address directly toward the Hub.

3.5.1.2 PROs and CONs

3.5.1.2.1 PROs:

- The splitting of hub traffic and bilateral agreements traffic is solved by the IMSI to MGT translation at the VPMN without the need of any further analysis.
- Ensures Centralized signaling through the hubs
- No impact on GSM services like USSD, SOR, and CAMEL etc.
- Full transparency for the clients and indirect transparency for the MNOs.
- Hub provider does not have to be a SCCP provider. Allows for use of existing SCCP network without any changes at the SCCP provider level.
- This solution can be up and running in a very short term.

3.5.1.2.2 CONs

- Intermediate GT translation at the operator level required for SMS-MO.
- Third party systems (SOR, SMS Antifraud, CAMEL Billing etc.) will need to know the Alias GTs assigned to all network nodes. This needs to be addressed at the process/implementation level and is not a limitation in itself.
- A numbering allocation is required from ITU-T for each hub provider or a generic allocation like 888 is required and subsequently managed by an organization independent of any hub provider.
- A full data transfer, distribution and change management mechanism is required to ensure that the latest values in the True-to-Alias mappings are known by all affected parties.
- Certain switch types use only the country code of the HLR E.164 address to determine the home country. This is particularly important when using BOICexHC.

An Alias GT of the true HLR could result in 'barred service' when a subscriber attempts to place a call to home country.

- Mobile Global Title is not used in World Zone 1, and so cannot be used to direct a subscriber's location update, or information retrieval requests to the hub.

3.5.1.3 Example Only

This example is for understanding only – Not definitional to the AGT Architecture.

Mobile Originated SMS Call Flow

This call flow uses the same operator information as the location updating call flow example. This call flow depicts the submission of a mobile originated short message operation performed by a roaming subscriber. This particular example is used to highlight considerations unique to an address manipulation roaming hub. The destination address of the operation is provided from the SIM card in the roaming mobile station. Special address translation is required to ensure that the operation is sent to the roaming hub by the serving MSC.

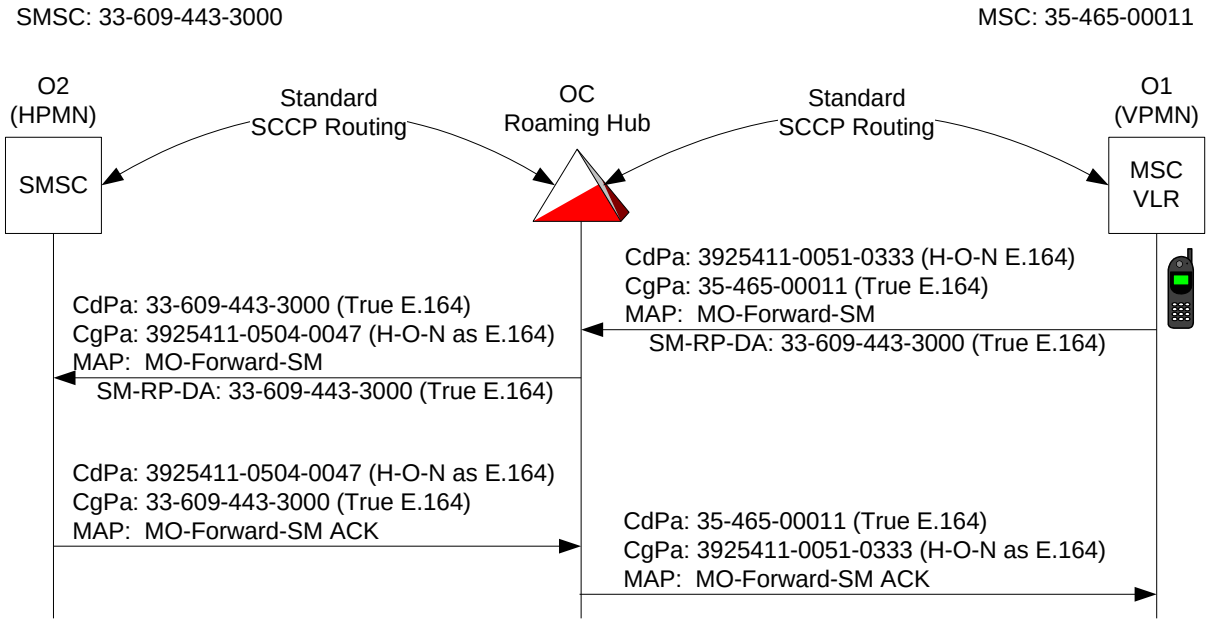

Figure 27: Mobile Originated SMS Call Flow

Steps:

1) PLMN O1's MSC issues MAP-MO-Forward-SM.

- MSC performs GT translation of the True E.164 SMSC address to the pre-configured Alias GT E.164 address of the SMSC.
- SCCP Called Party Address is GT routed on Alias GT of SMSC (CdPa: H-O-N SMSC).
- SCCP calling Party Address is GT routable on the True E.164 address of the MSC (CgPa: True E.164 MSC).

- The GT entry indicates that the MSU should be forwarded through the normal SCCP service providers (not shown) and SS7 network providers (not shown) which route the MSU to the OC Roaming Hub.

2) The OC Roaming Hub has responsibility to map various addresses from Hub Alias values to True values and from True values to alias values.

The SCCP Called Party Address to be routed forward must become the True E.164 address of the Alias SMSC address. The Alias E.164 SMSC address is located in an address mapping table and the matching True E.164 SMSC address is substituted in the outbound MSU.

The SCCP Calling Party Address to be routed forward must become an Alias GT of the True MSC address. The True MSC address is located in an address mapping table, and the one-to-one matching alias value is substituted in the outbound MSU. The Alias value is a Hub-Operator-Node (H-O-N) value treated as an E.164 address.

The TCAP package may contain the MO-Forward-SM operation; if it is present, the SM-RP-DA parameter contains the True E.164 address of the destination SMSC. In this particular case, the operation is present; the address is left in True E.164 form; it is not mapped to an alias address.

The MSU is forwarded through the normal SCCP service providers (not shown) and SS7 network providers (not shown) which route the MSU to the Home operator's SMSC.

3) PLMN O2's SMSC receives the MSU, and responds with an acknowledgement to the sending MSC.

The responding MSU's SCCP called party address is reflected from the original calling party address (Alias GT of the originating MSC). The calling party address is set to the SMSC's True E.164 address.

The MSU is forwarded through the normal SCCP service providers (not shown) and SS7 network providers (not shown) which route the MSU to the OC Roaming Hub.

4) The OC roaming Hub relays the result of the Mo-Forward-SM operation from O2's SMSC to O1's MSC. The SCCP addresses are modified from True E.164 of SMSC to Alias GT of SMSC and from Alias GT of MSC to True E.164 of MSC.

The OC Roaming Hub does not need to open the TCAP package since a result does not contain any addresses that may require mapping.

The MSU is forwarded through the normal SCCP service providers (not shown) and SS7 network providers (not shown) which route the MSU to the visited operator's MSC. The MSC completes the transaction by acknowledging success to the Mobile Station.

3.5.1.4 VPMN loading SMSC Alias GT Addresses for the Example above

True E.164 SMSC Addresses are programmed on SIM cards. The True E.164 SMSC address is sent to the serving MSC as the Destination Address (SM-RP-DA) over the air interface as part of a SUBMIT-SM request. The SUBMIT-SM request becomes a MO_FORWARD_SM from the serving MSC to the destination SMSC in the application context of a ShortMsgMO-Relay.

PLMN O1 (VPMN) must set up E.164 translation for an SCCP called party address containing the SMSC GT (CdPA). The True E.164 address must be translated to the Alias GT routing to the OC Roaming Hub by PLMN O1, to ensure the proper handling of MO_Forward_SM.

The Full E.164 SMSC address must be mapped to its specific matching Alias address by PLMN O1 (VPMN). Partial routing Alias address to the AGT Roaming Hub is not viable. When a mobile user sends a large short message, it is not conveyed in the same MSU as the MAP-OPEN Request. The MSU will contain a routing label, SCCP addressing, and a TCAP package with a Dialogue Portion only. The Dialogue Portion contains a MAP-OPEN request identifying an Application Context of ShortMsgMO-Relay. The MSU requests the establishment of an end-to-end transaction prior to sending the MO_Forward_SM operation. The contents of the MO_Forward_SM operation are not available to the OC Roaming Hub until the end-to-end transaction is established. The OC Roaming Hub needs the full Alias GT address to be able to forward the MAP-OPEN only MSU to the correct SMSC.

It is the responsibility of the OC Roaming Hub service provider to supply the list of the HPMN's SMSC addresses and their associated Alias addresses to the VPMN to be loaded in SCCP translation global title tables by the VPMN operator for each HPMN to be supported through the AGT roaming hub.

3.6 Diameter based OC Roaming Hubbing Architecture Alternatives

3.6.1 Alternative 1: Direct connection

3.6.2 Brief Synopsis

The basic principle of this architecture is to have a direct connection to an Open Connectivity roaming hub.

3.6.3 Architecture Description

The Direct connection architecture depends upon the Home Network Realm, Application ID and static realm routing table for all the information necessary to transfer signalling traffic between the network of the MNO and a roaming hub.

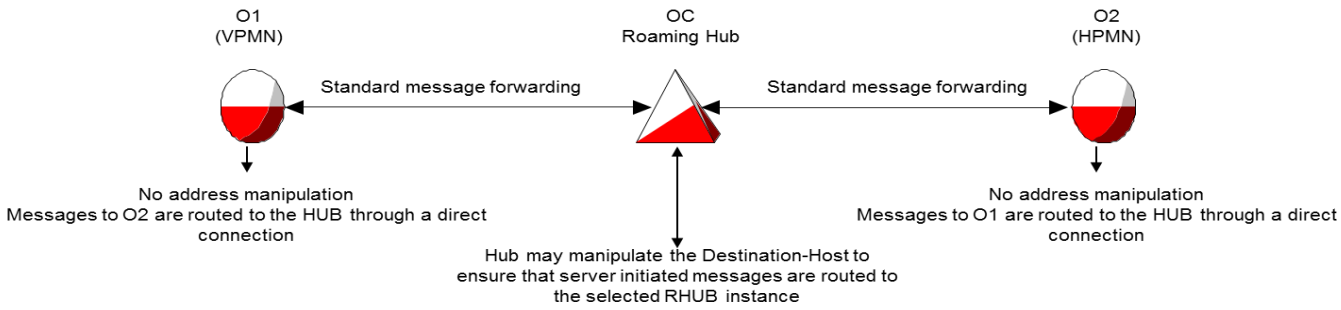

Figure 28

Figure 29: Diameter hub direct connection

3.6.4 Call Flows

The following diagram shows two (2) PLMNs interconnected via Diameter signalling with an 4G Open Connectivity Roaming Hub. For simplicity, each PLMN is shown with only one

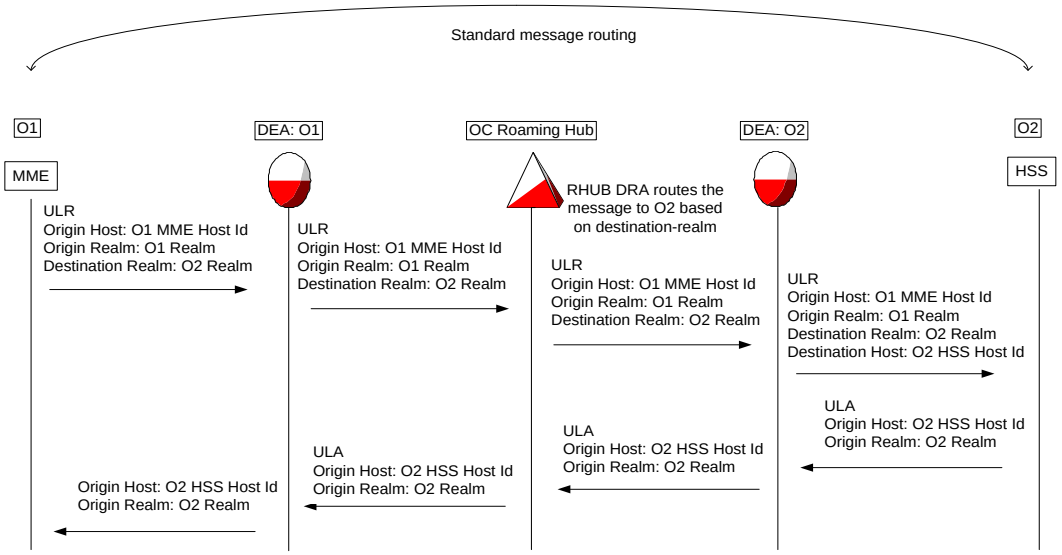

Figure 30: DEA between HSS or MME and the 4G OC Roaming Hub

Steps:

1) PLMN O1's MME/SGSN issues a diameter Update-Location-Request message to its DEA, according to the routing policy and based on the Destination Realm (O2 Realm).
2) The DEA sends the diameter Update-Location-Request message to the proxy DRA of the OC Roaming Hub with IMSI in User-AVP value and Destination-Host AVP and Destination-Realm AVP. The message is routed based on the Destination Realm (O2 Realm)
3) Proxy DRA checks if Diameter message it has received contains Destination Host and Destination Realm. If it finds a match for Corresponding Destination Host/ Realm in its routing table/peer table it forwards the message to next hop or recipient identified in the Realm Routing Table.

Proxy agents of the OC Roaming Hub route over the physical connections the diameter message using Diameter Routing Table to the DEA of PLMN O2

4) PLMN O2's DEA evaluates the IMSI in User-AVP value of the received Diameter Update-Location-Request message. Then route the request message to O2's HSS.
5) The remaining Diameter signalling traffic transfers are similar to steps 1 through 4 where the Destination Realm and Destination Host swapped with Origin Realm and Origin Host. The original Destination Realm becomes the new Origin Realm and the original Destination Host becomes the new Origin Host. The Origin Realm and Origin

Host are not used for routing purposes. Only the Route-Record is used for the Response message routing determination.

PROs and CONs

PROs:

3.6.1.1 CONs: More complex to manage if an Operator will open services via a Roaming Hub and also bilateral via an IPX provider

3.6.2 Alternative 2: Origin/Destination Realm Based Routing

3.6.2.1 Brief Synopsis

The basic principle of this architecture is to leverage common capabilities of the Diameter proxies. Diameter proxies are capable not only to route based on destination-host and destination-realm but they are capable of routing based on origin-realm and origin-host, application-id and command-codes.

The IPX carrier in between the Roaming HUB and the MNO shall support this feature.

The Diameter proxy in the IPX performs routing based on origin and destination realm when receiving a message and route appropriately depending of the roaming agreement.

If there is a direct roaming agreement between the MNOs then the IPX sends the traffic to the destination MNOs or to its IPX carrier.

If there is a hubbing agreement then the IPX carrier delivers the message to the originating MNO's Roaming Hub provider.

Architecture Description

The Origin/destination realm alternative relies on the capability of the IPX carrier to perform it. The following diagram shows the routing used to deliver signaling messages to and from the OC roaming hub.

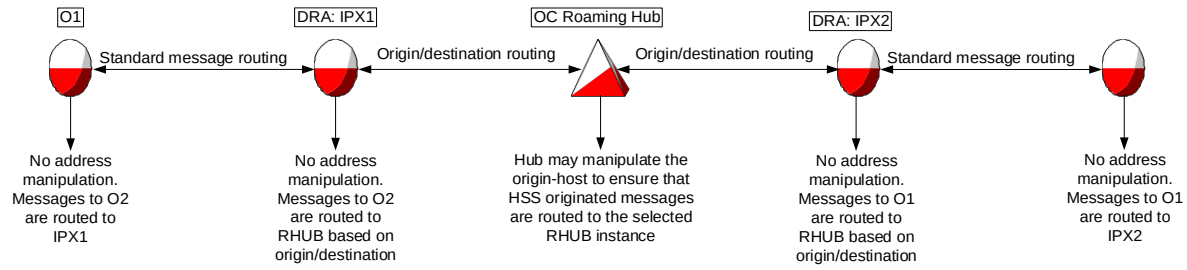

Figure 31: Diameter hub with realm based routing

3.6.2.2 Architecture Description

The following diagram shows the routing of a UpdateLocationRequest and UpdateLocationAnswer messages between two (2) PLMNs interconnected through an 4G Open Connectivity Roaming Hub. The MNO are connected to the HUB through an IPX carrier.

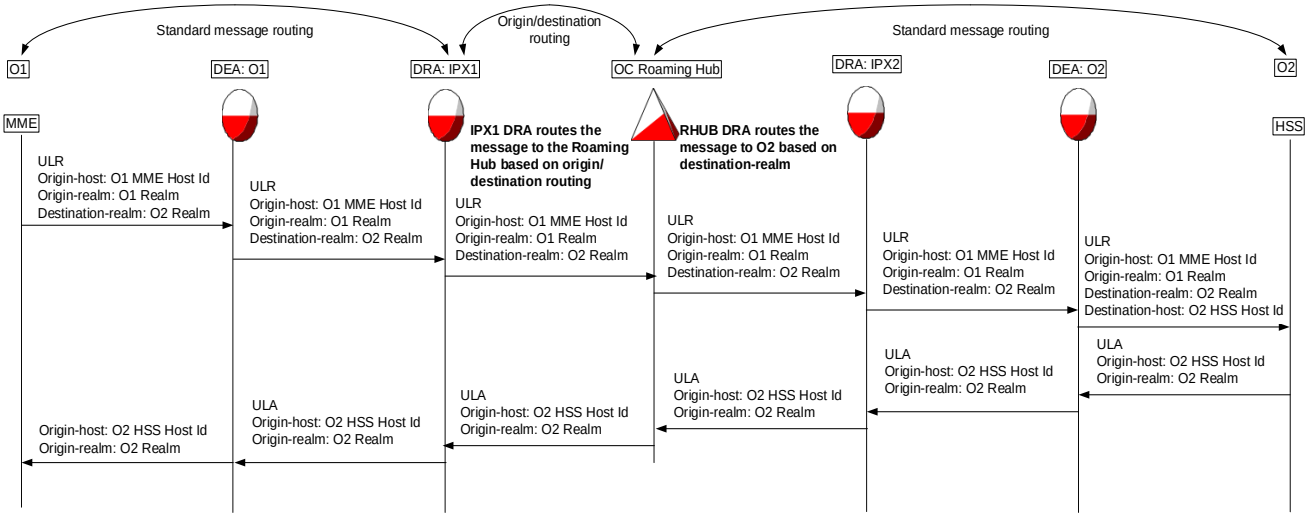

Figure 32: Call Flows

Note:

The DEA may be implemented by IPX DRA.

Steps:

1. The MNO O1 MME sends an UpdateLocationRequest to the HPLMN
2. The MME creates the destination-realm and origin-realm according to the 3GPP rules (epc.mnc<MNC>.mcc<MCC>.3gppnetworks.org. It routes the message to the next Diameter proxy. This is DEA O1.
3. The DEA performs normal realm routing and sends the message to the IPX1 DRA.
4. IPX1 DRA receives the message. It is capable of advanced routing based origin/destination of the message. It has a routing-rule matching the origin and the destination realms. This route points to the Routing HUB. IPX1 DRA sends the ULR to the Open Connectivity Roaming HUB.
5. The OC Roaming Hub receives the ULR and performs a standard routing based on the destination realm. It sends it to the DRA of MNO O2's IPX carrier
6. The ULR is routed by IPX O2 to O2 DEA and eventually to the HSS. The DEA performs the last routing and sends it to the HSS where the roamer's subscription is recorded. It sets the Destination-host.
7. The HSS receives the ULR, performs the subscription verification and creates an UpdateLocationAnswer message.
8. The HSS sends the ULA to the host that it received the original request from: the DEA O2
9. The ULA is routed back to the MME following the reverse path of the Request

For HSS originated messages like CancelLocationRequest or InsertsubscriberDataRequest, the same routing principles apply but the origin/destination realm based routing is performed by the DRA of MNO O2's IPX carrier.

3.6.2.3 Implementation Considerations

There is no specific implementation consideration for the roaming partners.

The only requirement is on the IPX carriers' DRA.

They must support the origin/destination realm based routing. For a roaming relation between MNO O1 and MNO O2 through Hub 1 then it must have a routing rule:

- If origin-realm is O1 realm and destination-realm is O2 realm then route to OC Roaming HUB

3.6.2.4 PROs and CONs

PROs:

- The splitting of hub traffic and bilateral agreements traffic is solved by the IPX carrier of MNOs.
- It doesn't require a new direct Diameter connection with the Roaming HUB
- Full transparency
- Hub provider does not have to be a IPX carrier

CONs:

The IPX carrier may not support the advanced routing capability.

3.6.3 Alternative 3: Destination-Realm modification

3.6.3.1 Brief Synopsis

The basic principle of this architecture is not to change the Real-Based Diameter routing. This architecture allows a MNO with a hubbing agreement to route its traffic through the Roaming Hub identified by its domain realm "hub-realm", by appending directly the Roaming Hub realm to the Destination Realm.

3.6.3.2 Architecture Description

The Destination Realm modification alternative relies on the OC Roaming Hub agreement with O1. The following diagram shows the routing used to deliver signaling messages from O1 to O2 through OC Roaming Hub. Note that O2 might or might not have specific agreement with the hub.

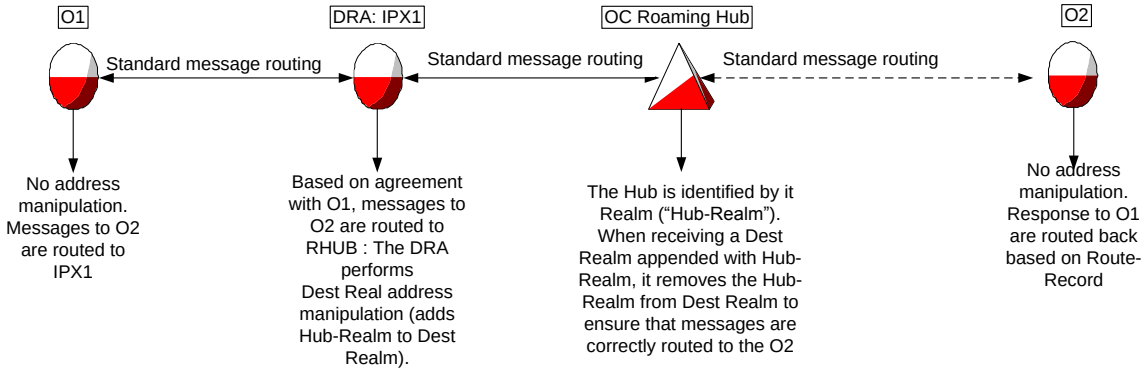

Figure 33: Signaling messages delivering diagram

3.6.3.3 Call Flows

The following diagram shows the routing of a UpdateLocationRequest and UpdateLocationAnswer messages between two (2) PLMNs interconnected through an 4G Open Connectivity Roaming Hub. The MNO are connected to the HUB through an IPX carrier.

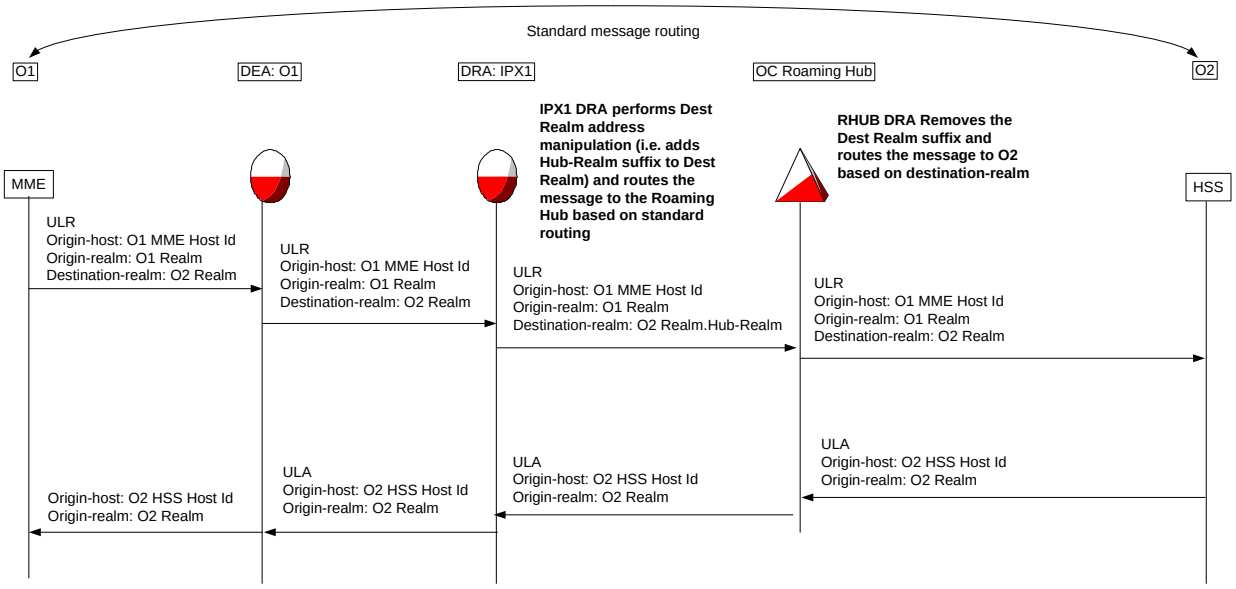

Figure 34: Routing of a UpdateLocationRequest/Answer

Steps:

1. The MNO O1 MME sends an UpdateLocation to the HPLMN
2. The MME forms the destination-realm and origin-realm according to the 3GPP rules (epc.mnc<MNC>.mcc<MCC>.3gppnetworks.org. It routes the message to the next Diameter proxy. This is DEA O1.
3. The DEA performs normal realm routing and sends the message to the IPX1 DRA.

4. IPX1 DRA receives the message. Based on agreement with the MNO, the DRA modifies the Dest Realm by adding the Hub realm as a new suffix to the Dest Realm. This route points to the Routing HUB. IPX1 DRA sends the ULR to the Open Connectivity Roaming HUB.
5. The OC Roaming Hub receives the ULR. It removes the suffix from the Dest Realm to get back to the initial Dest Realm and performs a standard routing based on the destination realm. It sends it to the DRA of MNO O2's IPX carrier
6. The ULR is routed by IPX O2 to O2 DEA and eventually to the HSS. The DEA performs the last routing and sends it to the HSS where the roamer's subscription is recorded. It sets the Destination-host.
7. The HSS receives the ULR, performs the subscription verification and creates an UpdateLocationAnswer message.
8. The HSS sends the ULA to the host that it received the original request from: the DEA O2
9. The ULA is routed back to the MME following the reverse path of the Request provided by the Route-Record.

For HSS originated messages like CancelLocationRequest or InsertsubscriberDataRequest, the same routing principles apply but the Dest Realm modification is performed by the DRA of MNO O2's IPX carrier.

The Open Connectivity Roaming Hub may manipulate the Origin Host to ensure the HSS originated messages are routed to the selected Roaming Hub instance. In that case the call flow is as follows:

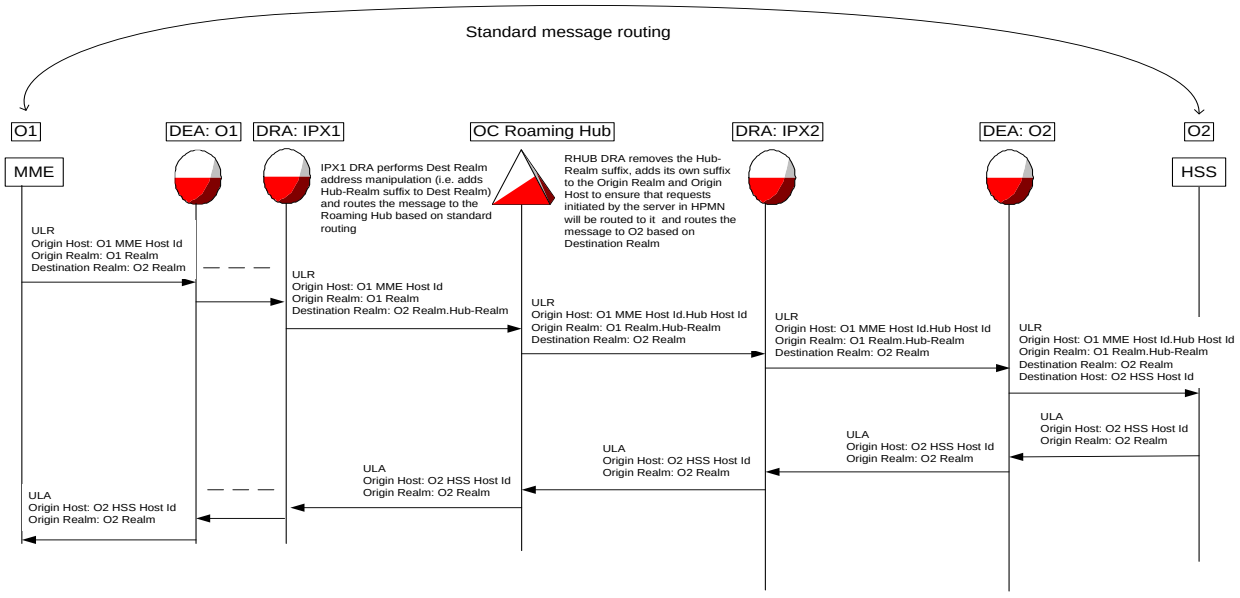

Figure 35: Routing of a UpdateLocationRequest/Answer with Hub manipulation

Steps: The MNO O1 MME sends an UpdateLocation to the HPLMN

1) The MME forms the destination-realm and origin-realm according to the 3GPP rules (epc.mnc<MNC>.mcc<MCC>.3gppnetworks.org. It routes the message to the next Diameter proxy. This is DEA O1.
2) The DEA performs normal realm routing and sends the message to the IPX1 DRA.
3) IPX1 DRA receives the message. Based on agreement with the MNO, the DRA modifies the Dest Realm by adding the Hub realm as a new suffix to the Dest Realm. This route points to the Routing HUB. IPX1 DRA sends the ULR to the Open Connectivity Roaming HUB.
4) The OC Roaming Hub receives the ULR. It removes the suffix from the Dest Realm to get back to the initial Dest Realm, adds its own suffix to the Origin Realm and Origin Host to ensure that requests originated by the HPLMN will be routed back to the OC Roaming Hub, and performs a standard routing based on the destination realm. It sends it to the DRA of MNO O2's IPX carrier
5) The ULR is routed by IPX O2 to O2 DEA and eventually to the HSS. The DEA performs the last routing and sends it to the HSS where the roamer's subscription is recorded. It sets the Destination-host.
6) The HSS receives the ULR, performs the subscription verification and creates an UpdateLocationAnswer message.
7) The HSS sends the ULA to the host that it received the original request from: the DEA O2
8) The ULA is routed back to the OC Roaming Hub following the reverse path of the Request provided by the Route-Record. From OC Roaming Hub the ULA is routed back to the MME following the reverse path of the Request provided by the Route-Record Implementation Considerations

3.6.3.4 Implementation Considerations

There is no specific implementation consideration for the roaming partners. The only requirement is on the IPX carriers' DRA. They must support the Dest Realm manipulation.

3.6.3.5 PROs and CONs

PROs:

CONs:

4.1 # 4 Interoperability of Architectures

Interoperability within an OC Roaming Hub

The interoperability of different architectures or multiple architectures within an OC Roaming Hub is the responsibility of the OC Roaming Hub implementor. The OC Roaming Hub implementor shall provide interoperability for those architectures made available for commercial use.

4.2

Interoperability between OC Roaming Hubs

The Open Connectivity high level requirements indicate that the Roaming Hub Solution Provider must be prepared to work with all other providers of like-solutions to ensure that the

solutions are inter-operable. Like-solutions are defined as any solution that is in compliance with Open Connectivity requirements.

A common framework for Hub-to-Hub interface is necessary to define a minimum capability for interoperable solutions.

Between any two operators involving a roaming subscriber, a maximum of two hubs can also be involved. One hub represents the VPMN and a second hub can represent the HPMN. The hubs do not necessarily implement the same technical architecture on the Operator-Hub interface. This section addresses interoperability between hubs irrespective of the technical architectures used on the operator-hub interface.

The following diagram depicts the use of two OC roaming Hubs in the relationship between PLMN O1 and PLMN 02. Any OC approved roaming hub architecture can be used to support the Operator-to-Hub interfaces. The architecture used on one Operator-to-Hub interface has neither direct nor indirect impact on the architecture used for the other Operator-to-Hub architecture.

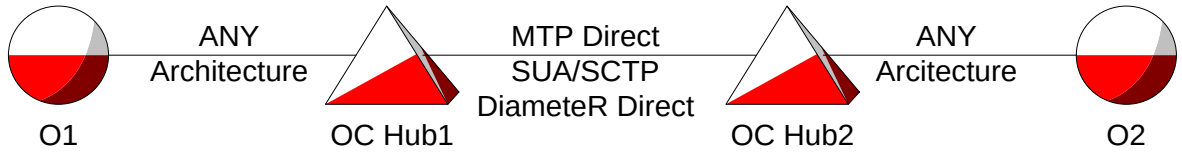

Figure 36: Two OC roaming hubs

The Hub-to-Hub interface has two preferred architectures: MTP Direct Routing and SUA/SCTP over IP. MTP Direct Routing architecture is considered the primary preferred method and serves as a minimum capability expected of all roaming hub solutions. The establishment of a minimum capability is expected to facilitate timely service engagement when operator to operator relationships are desired and involve two roaming hubs.

4.2.2 Hub-to-Hub via MTP Direct Routing

4.2.2.1 Logical Routing

MTP Direct Routing is the primary preferred method for signalling transport between hubs. MTP Direct Routing between hubs shall comply with the following requirements:

1. The MTP addressing shall operate within the International ITU signalling point code (ISPC) domain. (Note 1).
2. The ISPC associated with each hub shall only be used in the MTP routing label for MAP/CAP MSUs. ISPCs shall not be used in SCCP Party Addresses of MAP/CAP MSUs.
3. An OC Roaming Hub will indicate Global Title routing for all SCCP Party Addresses. A destination roaming hub is treated like the next translation point for global title routing services.
4. The SCCP layer shall encode party addresses in accordance with SCCP addressing as defined for inter-PLMN addressing in 3GPP TS 29.002. (Note 2).

5. Global Title addresses in the SCCP and higher layers shall be encoded using True E.164, True E.214 or True E.212 values. Alias or mapped global title values shall not traverse a hub-to-hub interface.

Note 1: As an exception, if two connecting hubs are in the same national point code domain, they may connect using MTP direct routing with national point codes. When national point codes alter the MTP transport variant from ITU to a national variant, the SCCP layer can be altered to the same national variant. Example: Two hubs in World Zone 1 may choose to interoperate using ANSI MTP point codes with an ANSI transport variant; this requires the SCCP layer to switch to the ANSI variant.

Note 2: Typically the SCCP layer variant shall follow the MTP variant chosen. The minimum expectation is an ITU-T compliant implementation using ISPCs for MTP transport.

4.2.2.2 Physical Routing

MTP Direct Routing defines the logical routing between hubs with a requirement for physical connectivity that supports the route definitions between involved point codes.

The physical connectivity can employ traditional SS7 signaling transport with MTP1, MTP2 and MTP3 over low speed links or high speed links. Any number of SS7 network providers may be involved to accomplish end-to-end physical connectivity.

The physical connectivity can also be accomplished using SIGTRAN based solutions on any one or more of the physical connections between hubs. SIGTRAN capabilities include M2PA, M2UA and M3UA.

The choices for physical connectivity and lower level protocols mentioned above are left to the two Roaming Hub Service Providers.

4.2.3 Hub-to-Hub via SUA/SCTP over IP

SUA /SCTP is an alternate preferred method for signalling transport between hubs.
SUA/SCTP shall comply with the following requirements:

1) The SUA implementation shall not impose point code requirements on either hub; this eliminates the issues associated with ITU/ANSI/CHINA/JAPAN variants, the national/international network indicator, and formal assignment of specific point codes by regulatory bodies.
2) The default address encoding variant shall be ITU with the use of Global Title Indicator of 0100_2 common with ITU networks. (Note 1)
3) An OC Roaming Hub will indicate Global Title routing for source and destination addresses. A destination roaming hub is treated like the next translation point for global title routing services.
4) The source and destination addresses shall be encoded in accordance with SCCP Addressing as defined for inter-PLMN addressing in 3GPP TS 29.002. (Note 1).
5) Global Title addresses in the SCCP and higher layers shall be encoded using True E.164, True E.214 or True E.212 values. Alias or mapped global title values shall not traverse a hub-to-hub interface.

Note 1: As an exception, if two connecting hubs are in the ANSI signalling domain, they may choose to communicate via SUA with address encoding variant using Global Title Indicator of 0010_2 common with ANSI networks.

The following statements have been used to direct the writing of this section as the controlling text which was produced during IRHG#5 in Seattle, WA, on 1st October, 2007.

"There are two preferred hub-to-hub interfaces:

1. - Direct MTP (International ITU Point Code Domain) either classical (MTP1, MTP2 and MTP3) or SIGTRAN based (M2PA, M2UA or M3UA)

2. - SUA over SCTP over IP (ITU Global Title).

SCCP and higher layers shall use unmodified addresses.

As an exception, if the two connecting hubs are in the same national point code domain, they may connect using MTP with national point codes.

As an exception, if the two connecting hubs are in the ANSI signaling domain, they may connect using SUA over SCTP over IP with ANSI Global Title."

4.2.4 Hub-to-Hub via Diameter Direct Routing Architecture

4.2.4.1 Logical Routing

Diameter Direct Routing between hubs shall comply with the following requirements:

1. The SCTP addressing shall operate within the International public IP address domain.
2. An OC Roaming Hub will perform routing of all Diameter messages based on realm. The destination's roaming hub is a Diameter peer of the origin's one.
3. The Diameter ream and hostnames shall comply with Diameter addressing as defined for inter-PLMN addressing in

Realm shall be encoded using True values. Realm values shall not traverse a hub-to-hub interface.

4.2.4.2 Physical Routing

SCTP is the only allowed Diameter transport protocol between Hubs.

Diameter Direct Routing defines the logical routing between hubs with a requirement for physical connectivity that supports the route definitions between involved IP address.

The physical connectivity can use traditional IP transport over dedicated leased line, MPLS or VPN tunnels. Any number of IP network providers may be involved to accomplish end-to-

end physical connectivity. The choices for physical connectivity and lower level protocols mentioned above are left to the two Roaming Hub Service Providers.

4.3 Interoperability with SMS Interworking when Roaming

Interoperability with SMS interworking has been an issue raised on multiple occasions with regard to OC Roaming Hubbing architectures.

Interoperability with SMS interworking while roaming involves three PMNs. HPMN is the home operator's network for a roaming subscriber intended as the receipient of an interworking SMS message. VPMN is the visited operator's network where the subscriber is roaming. APMN is the SMS originating operator's network. Assume a subscriber of APMN originates an SMS message to the HPMN's roaming subscriber.

OC Roaming Hubs could be involved in each of the relationships between the three PMNs. Each relationship could have no hub, one hub or two hubs between the paired PMNs.

The following diagram depicts the three involved PMNs, where each relationship has an OC Roaming Hub between the paired PMNs. For the purposes of this explanation, each OC Roaming Hub relationship enables bi-directional roaming.

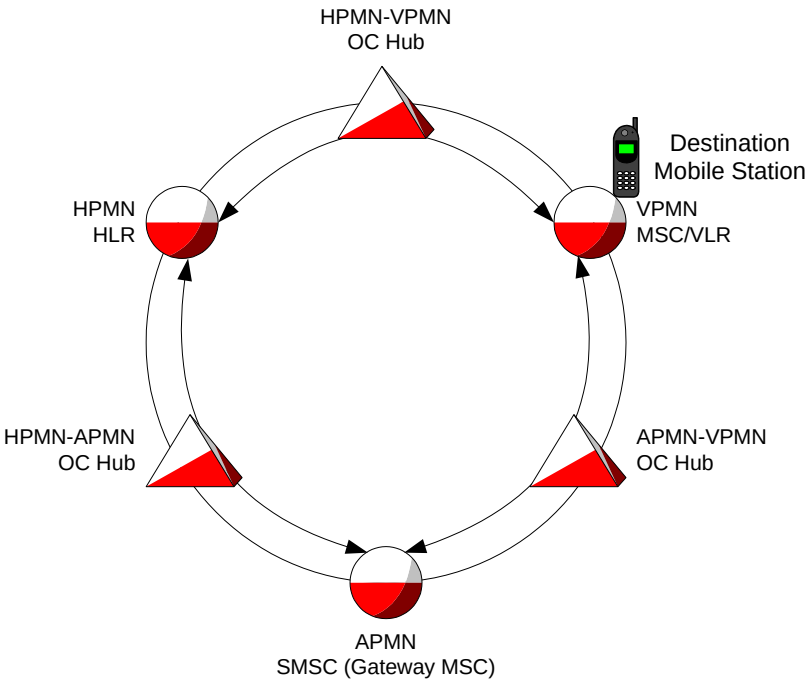

Figure 37: Roaming Hub between PMNs

The architectures of roaming hubs involved in each of these relationships can be divided into three categories when analyzing the impact of roaming hubs on SMS interworking while roaming:

1) True: Direct transparent addressing with no additional information modification – this category includes both MTP Direct Routing and SUA/SCTP architectures
2) TT: Direct transparent addressing with translation type information modified – this category includes the Translation Type architecture.
3) AGT: Indirect transparent addressing with Alias Global Title Mappings – this category includes the Alias Global Title architecture

SMS Interworking while roaming involves tasks necessary to deliver a text message from an SMSC of the APMN to an MS of the HPMN while the MS is roaming in the VPMN.

A discussion of SMS Interworking while roaming, true roaming, true interworking and mixed cases of interworking and roaming are presented in Annex A – Roaming Hub and SMS-IW.

According to the signalling diagrams of Annex A, it can be concluded that the SMS-IW traffic can be transported when roaming HUBs are used. It is possible as well to have in parallel roaming HUB agreement and SMS-IW agreement towards an independent SMS hub or on a bilateral way.

Depending of the topology of the APMN, HPMN and VPMN networks, it will be possible for the PMN to choose the HUB according to connection options that the HUB are offering. Therefore the PMNs using roaming HUB have to be aware that in the case where the SMS will not be transiting via the roaming HUB, the roaming HUB will not be in position to screen this traffic and to guaranty the delivery of the message in case of mixed scenario. In order to ensure a minimum quality of service for SMS, it would be recommended that the connection between the roaming hub and the PMN is setup in a way that the roaming hub is transporting the roaming leg of the SMS whatever architecture is used. However, if the PMN chooses to have an SMS-HUB provide all SMS interworking including SMS interworking to roamers, without the involvement of a roaming hub, this choice is also available. IR.75 has a recommended preferred solution for SMS interworking to an MS while roaming. It is a pure SMS HUB solution that allows each operator to limit access to their network elements to only their chosen SMSIP for all interworking including interworking to roamers.

4.4 Interoperability with TCAPsec

Impact to roaming hub – two fold, mode 1 allows viewing of fields – TCAP package is transmitted in clear – with security tag to ensure no ‘corruption’? Mode two does not allow viewing of fields – TCAP package is encrypted and security tag is included to ensure no corruption. if the IMSI or any other field is needed, then it must be made visible…

Impact on TCAP rebuild – the rebuild will force a new computation for any mode of TCAPsec. Security tag is an encryption function applied to the TCAP package.

If TCAPsec is an issue between client and hub it will be an issue between hub and hub.

TCAPsec is defined as Transaction Capability Application Part User Security within Network Domain Security within 3G Security, in the 3GPP Technical Specification 33.204. As IPsec applies to IP network domains, TCAPsec is applied to TCAP signalling domains.

TCAPsec is applicable to different types of signalling domains:

- PLMN to PLMN
- PLMN to Service Provider
- Service Provider to Service Provider

TCAPsec is defined with two distinct architectures:

- End to End (typical in PLMN to PLMN domains)
- Hub and Spoke (typical with Service Provider needing TCAP access)

OC Roaming Hubs serve as an ideal centralizing point to function as SS7 Security Gateways – single point of control for key sharing – one location can then function on behalf of all support networks using TCAPsec.

By using an OC Roaming Hub as a security gateway, distribution of encryption vectors is simplified for the operator. The OC Roaming Hub as a security gateway fulfills the efficiency gains of a one-to-many relationship.

Troubleshooting requires OC Roaming Hubs to have visible access to signalling messages in the clear. This can be accomplished with TCAPsec Mode 1, but not with mode 2. TCAPsec mode 2 requires the OC Roaming hub to function as a security gateway in order to have visible access to signalling messages in the clear.

Annex A Roaming Hub and SMS-IW

A.1 Background

Roaming and inter-working are at the core of the GSM success story. 3GSM subscribers now expect to access the same set of services at home and abroad. They expect to be able to share all 3GSM services with any other subscriber on any network.

The bi-lateral relationship, on which this success has been based, however, is now becoming a limiting factor to future success. With over 600 GSMA operator members, diversification of services and an increasing number of access technologies, it is unlikely that the current paradigm of bilateral relationships between networks will meet the expectations of operators going forward.

Since the interworking traffic must not be transported by the roaming hub, the SMS traffic has to be transported via the signalling path agreed in the AA.73/AA.71. According to the OC High level requirement, the PLMN must be able to setup a roaming relation via a roaming HUB and a SMS interworking relation via a SMS hub which can be different. It can be possible for the PLMN to have the roaming relation via a HUB and the SMS interworking relation bilaterally. It means the interworking traffic must be separated from the roaming SMS message in the case where the AA.19 agreement is signed bilaterally or with a HUB other than the roaming HUB.

When SMPP is used to accomplish SMS interworking, the presence of a roaming hub is not relevant. SMPP is an IP based SMS transport protocol that does not involve direct delivery to the MS. SMPP is used between SMSCs, SMS hubs, and both.

When SS7 is used to complete SMS interworking, the following GSM MAP operations are used between the various network elements.

SRI-SM	acquire MS identity (IMSI) and location (Serving MSC) Sent by SMSC or SMS Hub to HLR of destination MSISDN
InformSC	provide MS status, and SC presence on Message Waiting List Sent by HLR to SMSC or SMS Hub w/response to SRI_SM
ReadyForSM	indicate MS can receive SMS Sent by Serving MSC to HLR
AlertSC	indicate MS can receive SMS Sent by HLR to each SC on Message Waiting List
ReportSMDeliveryStatus	indicates a change of status for MS receiving SMS Sent by SMSC or SMS Hub to HLR
MOForwardSM	Mobile originated SMS message Sent by Serving MSC to SMSC (from SIM in MS)
MTForwardSM	Mobile terminated SMS (SMS delivery to MS) Sent by SMSC or SMS Hub to Serving MSC

- SMS delivery directly to the MS has the following cases to consider:
- Message from HPMN to MS in HPMN (Home to Home)
- Message from HPMN to MS in VPMN (Home to Roam)
- Message from APMN to MS in HPMN (Interworking to Home)
- Message from APMN to MS in VPMN (Interworking to Roam)

This section of the document is primarily concerned with SMS delivery from APMN to the MS roaming in the VPMN (SMS Interworking while roaming). The Message from HPMN to MS in HPMN (Home to Home) is not included in this document since it has neither interworking nor roaming components. The other cases are shown to promote a common understanding of the delivery process and the MAP operations involved.

The following table show how the MAP operations must be separated.

Operation Name	Type of traffic	Separation criteria
SRI-SM	Interworking	Must always be send to the SMS-HUB or HLR (bilateral)
MTForwardSM	Interworking/Roaming	Roaming Leg must be separate of the Interworking leg in case of mixed scenario. A section will describe it
MOForwardSM	Roaming	Depending of the MAP version it must be separated from the MTForwaqrdSM. A section will describe it
ReportSMDeliveryStatus	Interworking	Must always be send to the SMS-HUB or HLR (bilateral)
ReadyForSM	Roaming	Must always be sent via the roaming HUB
AlertSC	Interworking	Must always be sent to the SMS-HUB or SMSC (bilateral)
InformSC	Interworking	Must always be sent to the SMS-HUB or via the bilateral way.

Table 4: Separations of MAP operations

In this document the following assumption are made:

- All SMS-HUBs have to follow the IR.75 which is based on a manipulation of address method like the Alias GT method for the roaming HUB
- In the case where the SMS interworking is sent via the bilateral way no manipulation of GT will occur except if the terminating operator is using the Home routing method for the mixed scenario.
- Since the HUB is receiving the traffic correctly separated, it will be the responsibility of the HUB to keep it separated and since the SMS-HUB are using manipulation of address to route the traffic between them the method described in the IR.75 must be used.
- Since the HUB has to transport Camel signalling transparently, the Camel scenario for SMS will not be described in this document.

A.2 Signalling independent of routing method

A.2.1 MOForwardSM

The Mobile originated Forward Short Message operation is initiated from the MS destined to the SMSC address indicated by the MS. The SMSC address is almost always provided by the SIM of the MS. When the MS is roaming, the MOForwardSM transits the Roaming Hub as show in the following diagram.

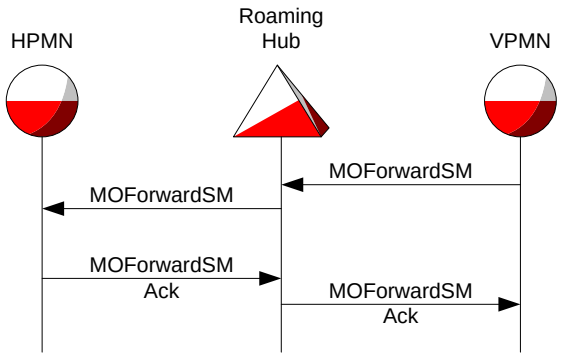

Figure 38: Mobile originated Forward Short Message operation

A.2.2 SRI-SM and MTForwardSM

These two operations are described together because the MTForwardSM operation cannot be sent without the identity and addressing information acquired in the return result of the SRI-SM operation. A successful SRI-SM operation must precede the MTForwardSM operation.

A.2.2.1 Pure Interworking Scenario

The pure interworking scenario is defined as SMS message delivery from an APMN to an MS in its own HPMN (Interworking to Home)

The pure interworking can be performed either with or without an SMS Hub between the APMN and the HPMN as shown the following sections.

A.2.2.1.1 MS-IW agreement via SMS HUB

When only one SMS hub handles signalling between the APMN and the HPMN, it can be the chosen hub of the APMN, the HPMN or both operators. The following diagram depicts the signalling flow through one SMS Hub.

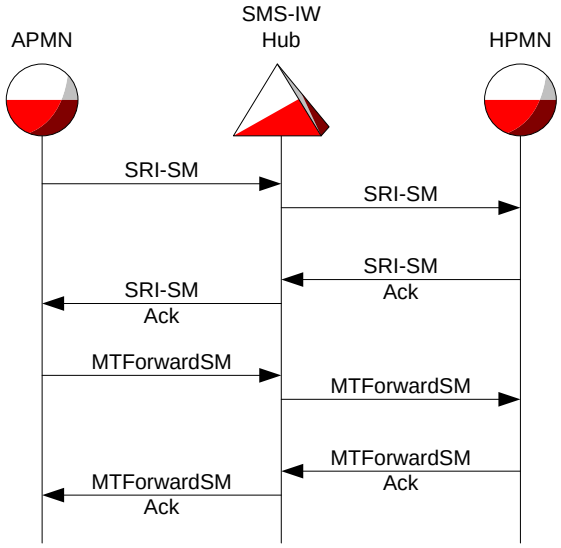

Figure 39: Single SMS diagram

Each operator can have a SMS Hub to support the SMS Interworking agreement between the APMN and the HPMN, The APMN interacts with their chosen SMS Hub (1) which in turn interacts with the HPMN' chosen SMS Hub (2). SMSHub (2) interacts with the HPMN.

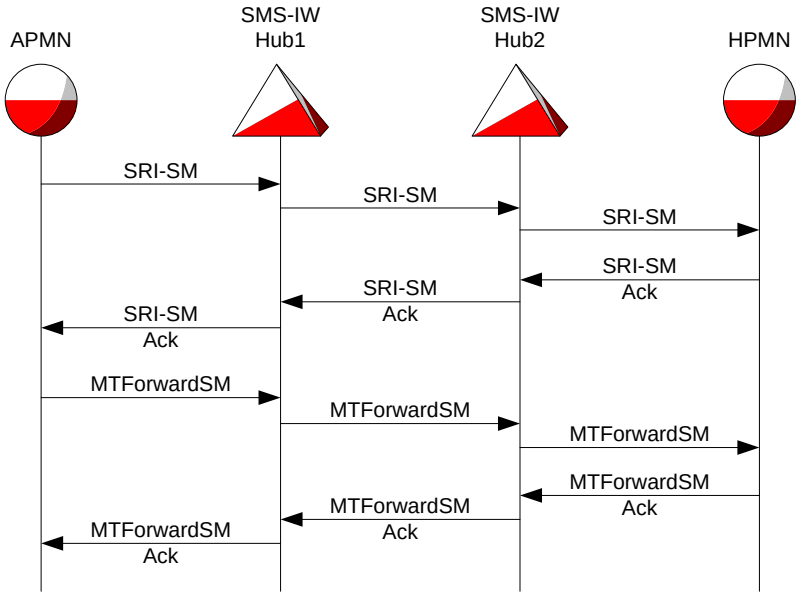

Figure 40: Multiple SMS Hub

A.2.2.1.2 SMS-IW agreement is Bilateral

When SMS interworking is handled according to existing bi-lateral agreements, the SMS Hubs are not necessarily involved. The following diagram illustrates the signalling flow when the APMN and HPMN communicate directly.

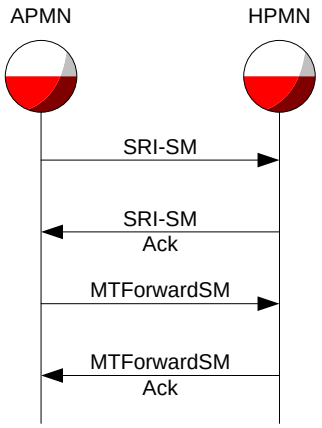

Figure 41: Bilateral SMS-IW agreement

An HPMN can choose to use a Home SMS Router to function as the recipient node of SMS interworking message traffic as shown in the following diagram. This is often referenced as the home routing method.

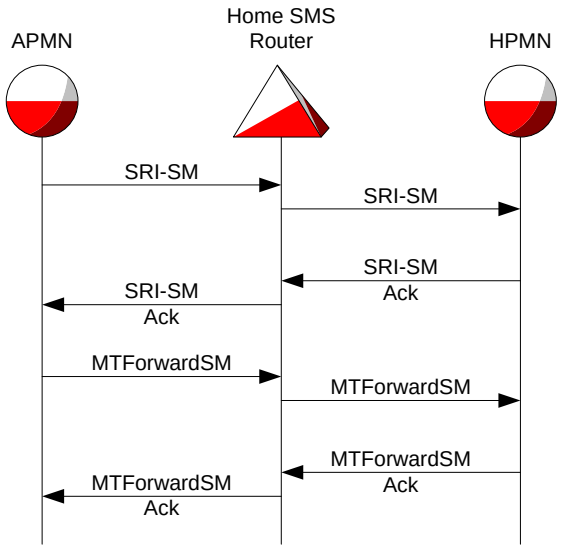

Figure 42: Hub SMS-IW agreement

It is possible for the HPMN to acquire the services of an SMS Hub to function as the Home SMS Router, including the use of an HPMN's node address for signalling.

A.2.2.2 Pure Roaming Scenario

The pure roaming scenario is defined as SMS message delivery from an HPMN to an MS of the HPMN when it is roaming in a VPMN (Home to Roam)

The pure roaming scenario applies when the MS is roaming and the SMS traffic is delivered from a network element within or functioning on behalf of the HPMN. This scenario can include SMS delivery from a SMSC in the HPMN or from a Home SMS Router in the HPMN.

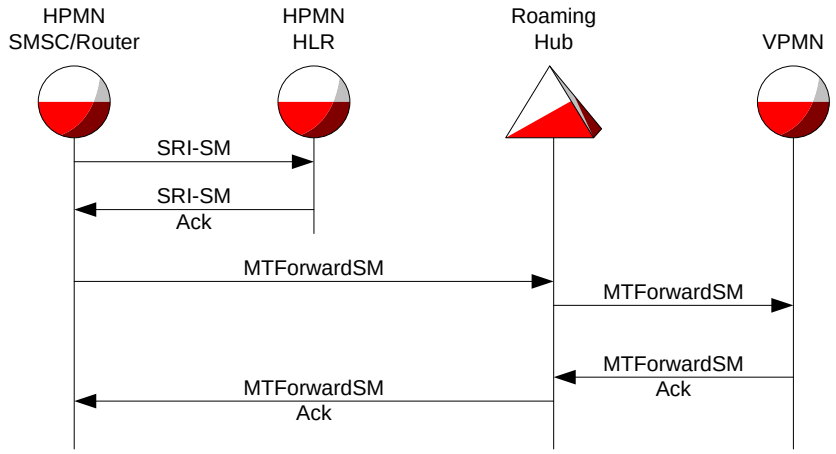

Figure 43: Pure Roaming Scenario

A.2.2.3 Mixed Interworking and Roaming Scenario

A.2.2.3.1 SMS-IW Agreement via SMS-HUB

A.2.2.3.1.1 Option 1: Roaming HUB Terminates SMS to VPMN

To be able to terminate the message it will be needed that the roaming hub agree to terminate the SMS directly from the SMS-HUB.

If Alias GT method is used with the roaming hub, the address schemes must be shared with the SMS-HUB so that true transparency can be maintained in the SMS-HUB to APMN reporting. Likewise, the alias to true address mapping must be handled within the blacklist capabilities of the SMS-HUB.

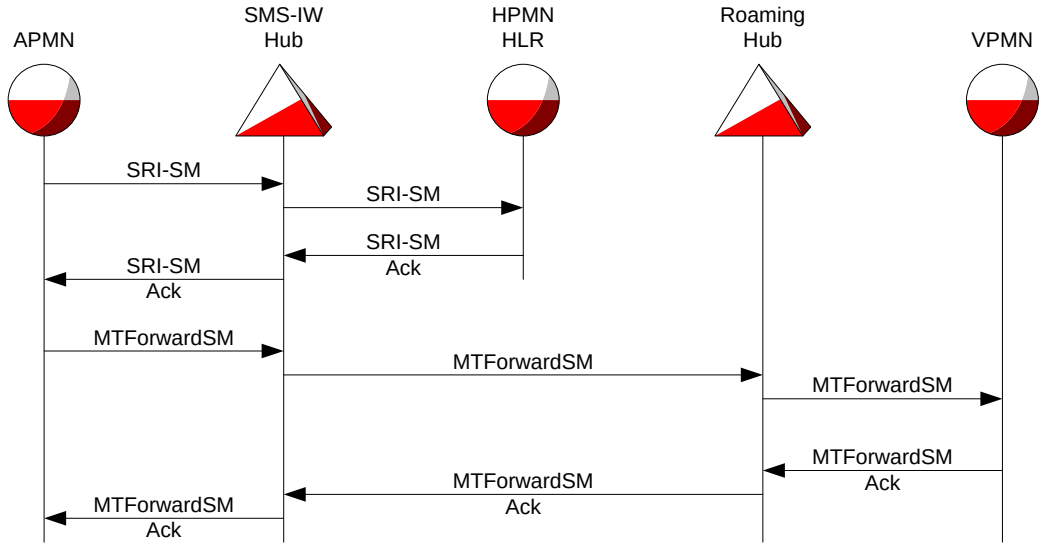

Figure 44: Roaming HUB Terminates SMS to VPMN

A.2.2.3.1.2 Option 2: SMS-HUB Terminates SMS to VPMN.

To be able to terminate the message it will be needed that VPMN agree to terminate the SMS directly from the SMS-HUB. The VPMN will need to open his network to the SMS-HUB of the HPMN.

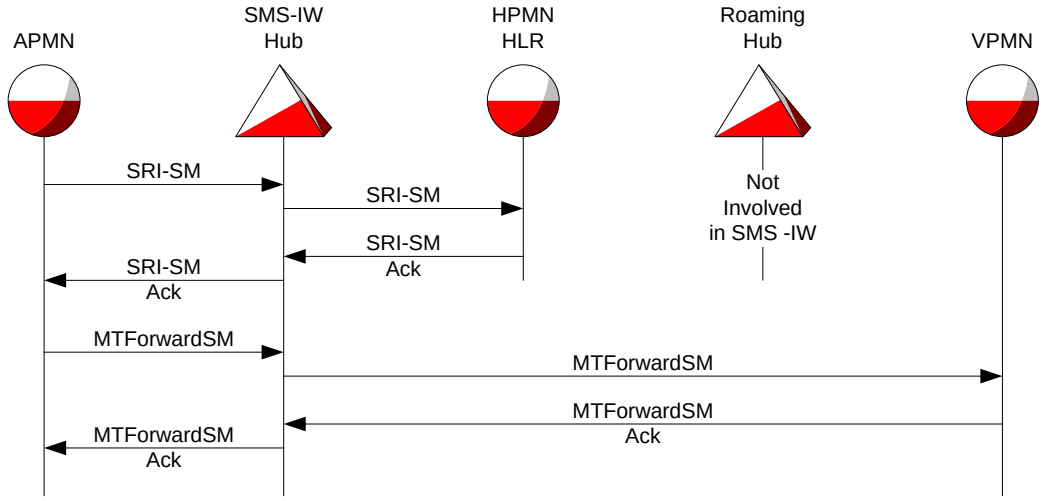

Figure 45: SMS-HUB Terminates SMS to VPMN

A.2.2.3.1.3 Option 3: The HPMN uses Home SMS Router

The HPMN SMS Router resides within the HPMN and is subject to the same routing rules for reaching the VPMN through the roaming hub as any other network element in the HPMN.

Effectively, this option is identical to the Pure Roaming Scenario for the HPMN to VPMN delivery portion.

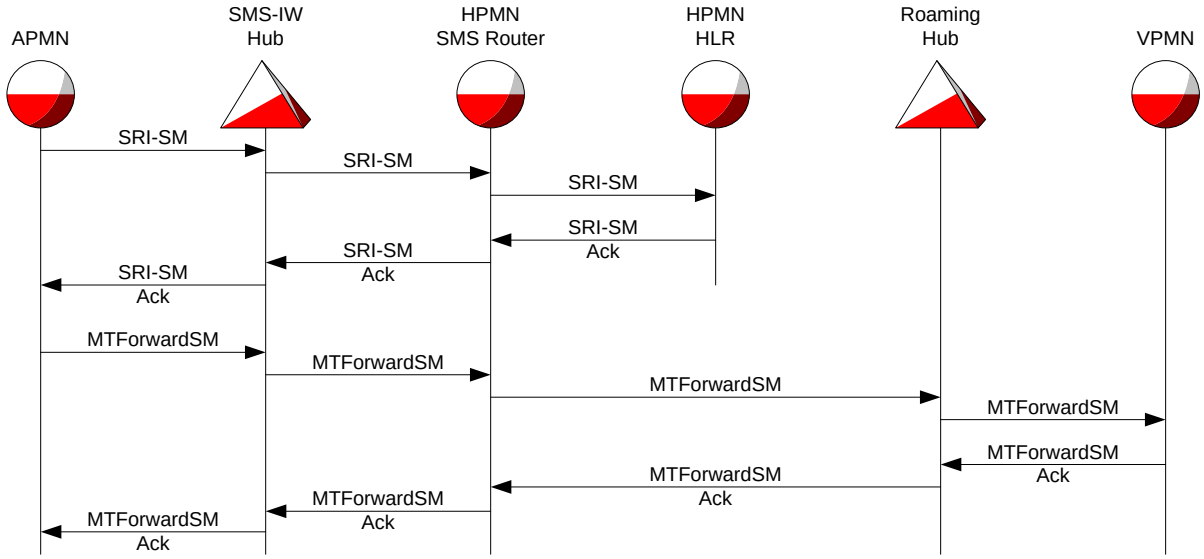

Figure 46: HPMN uses Home SMS Router

A.2.2.3.2 SMS-IW Agreement is Bilateral

No operator uses a SMS-HUB in any of the options in this section.

A.2.2.3.2.1 Option 1: Roaming HUB Terminates SMS to VPMN

To be able to terminate the message it will be needed that roaming hub agree to terminate the SMS directly from the APMN SMSC.

If Alias GT method is used with the roaming hub, the address schemes must be shared with the APMN so that true transparency of serving MSC address can be maintained in the APMN to HPMN reporting.

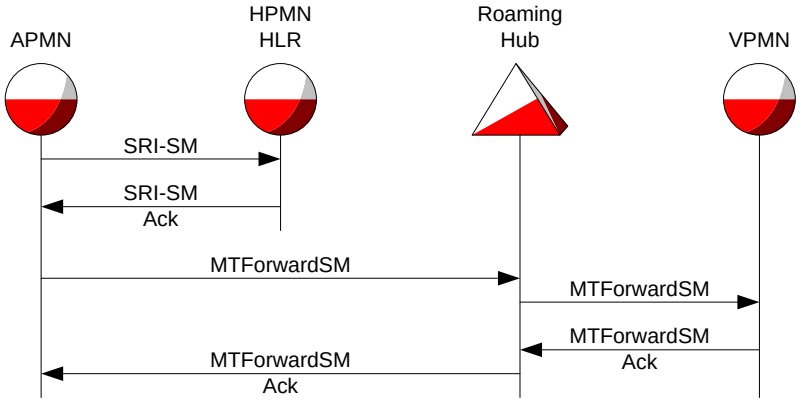

Figure 47: Roaming HUB Terminates SMS to VPMN

A.2.2.3.2.2 Option 2: APMN Terminates SMS to VPMN

To be able to terminate the message it will be needed that VPMN agree to terminate the SMS directly from the APMN SMSC. The VPMN will need to open his network to the SMSC of the APMN.

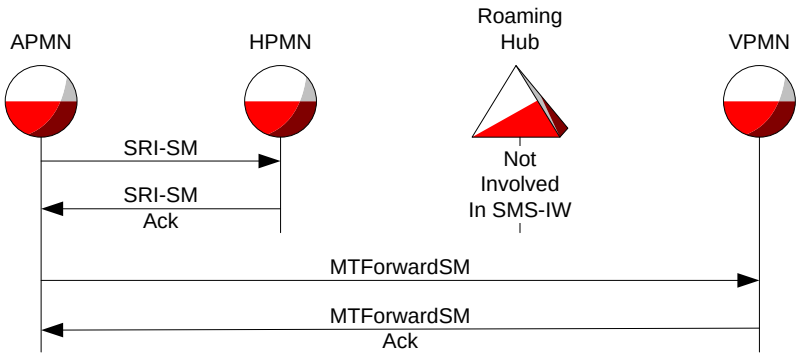

Figure 48: APMN Terminates SMS to VPMN

A.2.2.3.2.3 Option 3: The HPMN uses Home SMS Router

The HPMN SMS Router resides within the HPMN and is subject to the same routing rules for reaching the VPMN through the roaming hub as any other network element in the HPMN.

Effectively, this option is identical to the Pure Roaming Scenario for the HPMN to VPMN delivery portion.

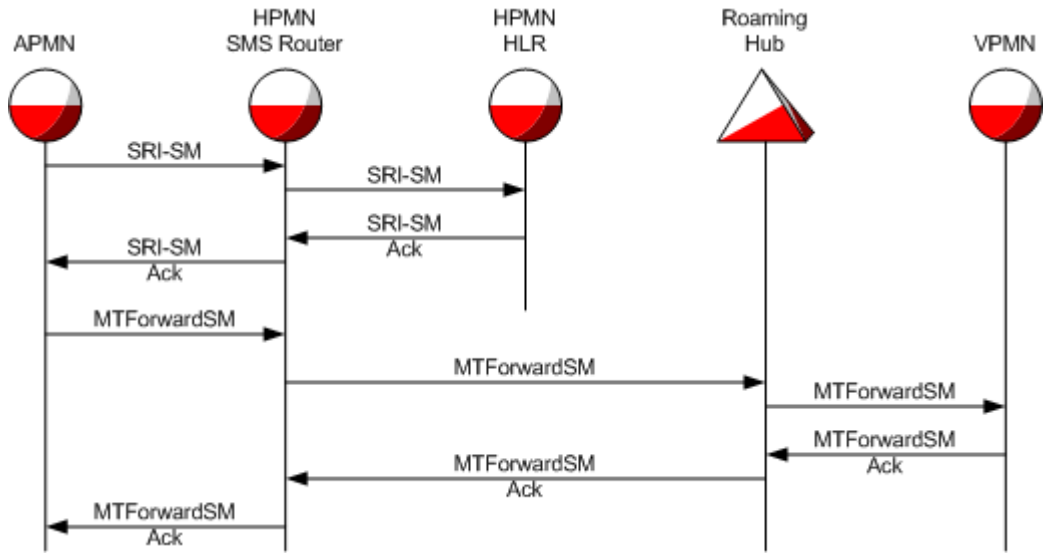

Figure 49: The HPMN uses Home SMS Router

A.2.2.4 ReportSMDeliveryStatus

This message is between the SMSC and the HLR, It can be sent between two PLMN only in the interworking case

A.2.2.5 SMS-IW Agreement via SMS-HUB

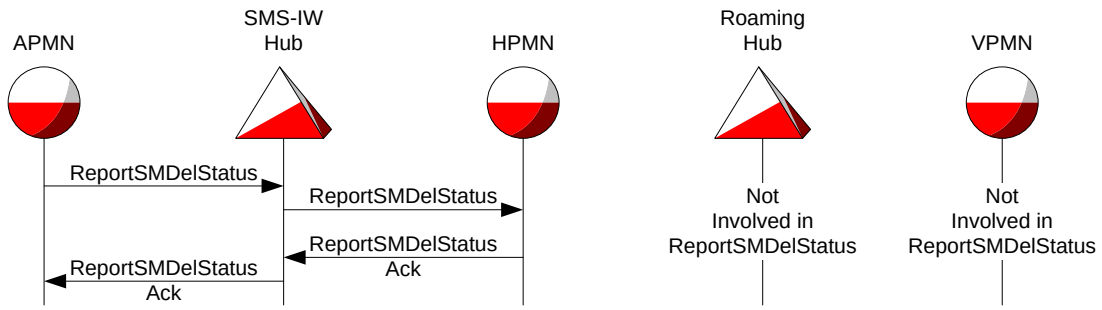

Figure 50: SMS Hub agreement

A.2.2.6 SMS-IW Agreement is Bilateral

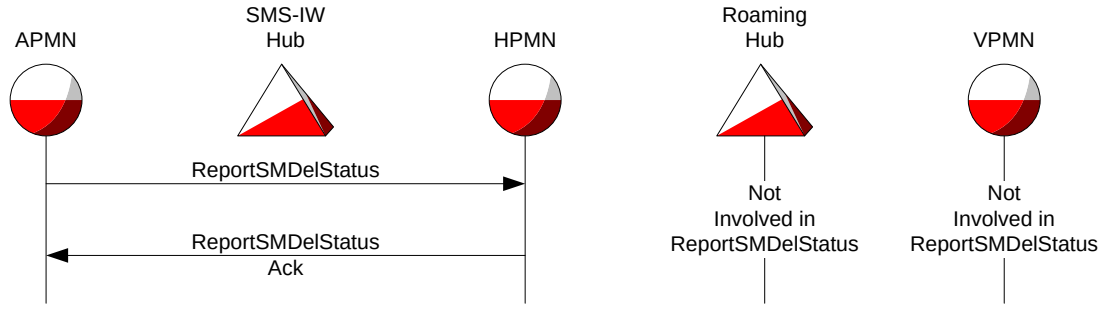

Figure 51: Bilateral SMS IW agreement

A.2.2.7 ReadyForSM

This message can only be sent between two PLMN in the case of roaming

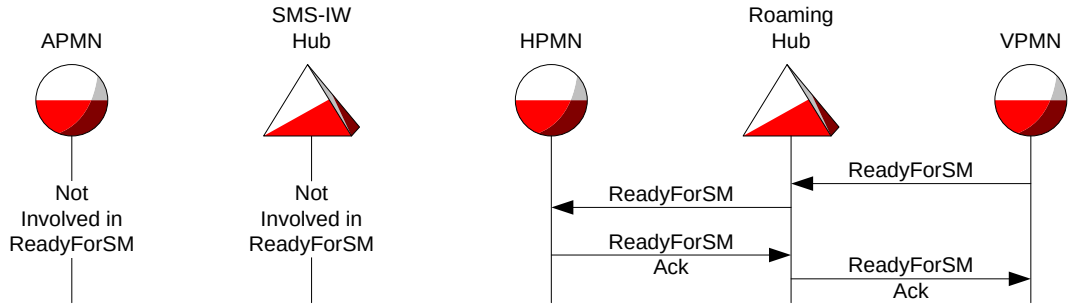

Figure 52: ReadyForSM diagram

A.2.3 AlertSC / InformSC

These two messages are similar and are sent from the HLR to the SMSC. The AlertSC is exchanged between the HPMN and APMN only in the case of interworking. The InformSC is an operation invoked with no reply. The InformSC invoke component is conveyed with the reply to an SRI_SM invoke component.

A.2.3.1 SMS-IW Agreement via SMS-HUB

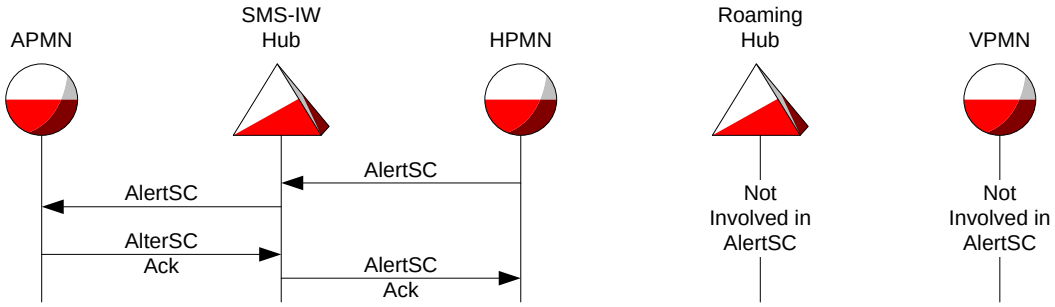

Figure 53: SMS HUB SMSIW agreement

A.2.3.2 SMS-IW Agreement is Bilateral

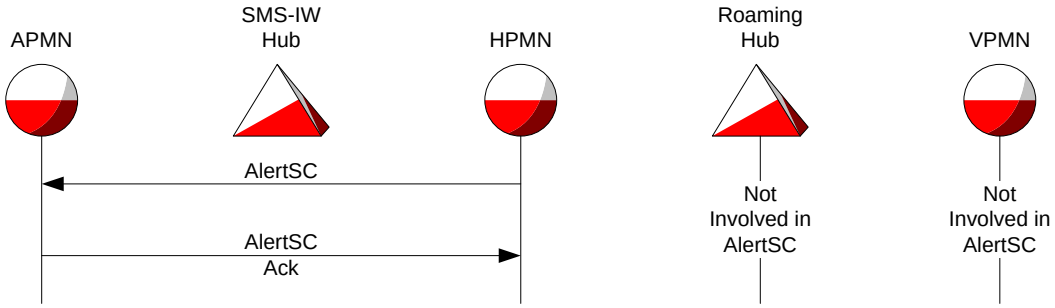

Figure 54: Bilateral SMS IW agreement

A.3 Signaling dependant UPON routing method

A.3.1 MOForwardSM

The Mobile Originated Forward Short Message operation occurs between the VPMN and the HPMN. It is limited to the pure roaming scenario and always transits the roaming hub independent of the routing method. It is included here only for completeness.

A.3.2 SRI-SM and MTForwardSM

A.3.2.1 Pure interworking Scenario

The pure interworking scenario as shown in section **Error! Reference source not found.** does not involve the roaming hub. The routing method that applies between an HPMN and a VPMN has no effect on the pure interworking scenario.

A.3.2.2 Pure Roaming Scenario

A.3.2.2.1 Tunnelling Methods

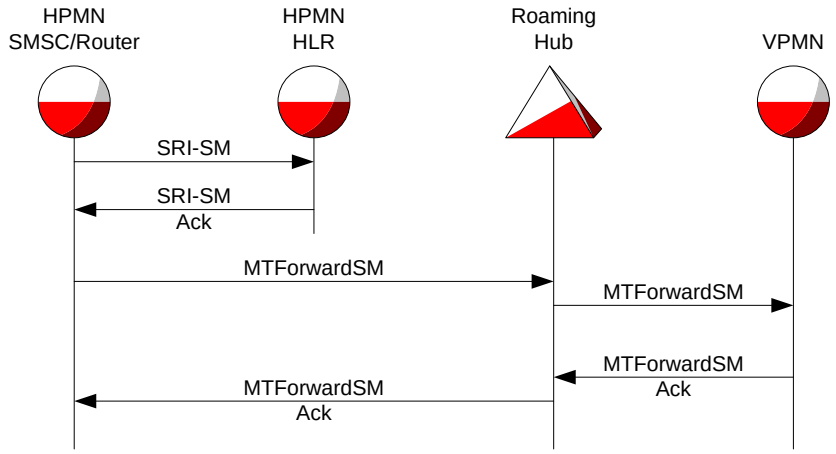

Figure 55: Destination node is a true address

MTP/TT/SUA: the destination node address from the HLR is a true address. Routing to the true address is subject to the traffic separation within the home operator. Traffic separation directs the MTForwardSM to the roaming hub for onward routing to the VPMN.

Traffic separation of the E.164 address can create an SMS interworking anomaly described later in section **Error! Reference source not found.** – **Error! Reference source not found.**.

A.3.2.2.2 Address Manipulation Method

Since with this routing method the alias GT stored in the HLR is used, the MTForwardSM will be naturally routed through the roaming HUB like it has to be.

Address routing of the E.164 address can create an SMS interworking anomaly described later in section **Error! Reference source not found.** – **Error! Reference source not found.**.

A.3.2.3 Mixed Interworking and Roaming Scenario

A.3.2.3.1 SMS-IW Agreement via SMS-HUB

Whenever operators wish to engage both SMS Hub service providers and Roaming Hub service providers, situations may arise that required the combined efforts of both service providers to accomplish the routing desired by the operator for SMS delivery via SMS interworking while roaming.

A.3.2.3.1.1 Option 1: Roaming Hub Terminates SMS to VPMN

Generally, roaming hubs that use tunnelling methods are not well suited to implement this option. Most of the implementation requirements are placed upon the SMS-HUB. With the SMS-HUB taking responsibility for interworking on behalf of the HPMN, the SMS-HUB can take on a global title address published by the HPMN as defined in IR.75 for the purposes of performing traffic separation and delivery to the roaming hub, as well as traffic separation in the VPMN to ensure the result is returned to the roaming hub.

Generally, the address manipulation method is best suited for this particular option. In fact it is very difficult to remove an address manipulation roaming hub from any SMS interworking and roaming option.

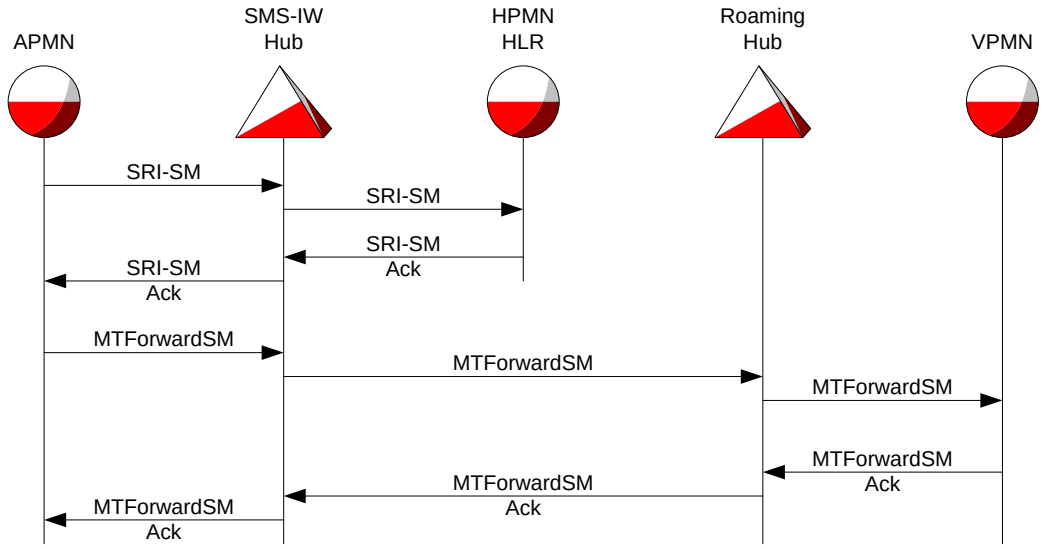

Figure 56: Roaming Hub Terminates SMS to VPMN

- MTP

In order to use this option, the SMS-HUB will need to fulfil the following requirement.

1. In the SMS-HUB it will be needed to send the message MTForwardSM through the roaming HUB only in the case where it is roaming relation through the roaming HUB. The SMS-HUB will have to use the IMSI contained in the message in order to setup the proper routing
2. In the VPMN, the MTForwardSM result will need to be sent through the roaming HUB using the global title set by the SMS-HUB. Multiple options are available for the global title address used by the SMS-HUB. The SMS HUB uses a global title (E.164) address from the HPMN (as per IR.75), that address could be used only for delivery to HPMN subscribers roaming which can be routed to the roaming hub, and the VPMN could route results to the roaming hub based on the same address.

- TT

In order to use this option if the roaming HUB is using the TT method, the following condition will need to be fulfilled.

3. In the SMS-HUB it will be needed to send the message MTForwardSM through the roaming HUB only in the case where it is roaming relation through the roaming HUB. Since the TT is not transported in the SRI message, the SMS HUB will need to set the correct TT in the message MTForwardSM and it send it via the roaming HUB.
4. In the VPMN, the MTForwardSM result will need to be sent through the roaming HUB using the global title set by the SMS-HUB. Multiple options are available for the global title address used by the SMS-HUB. The SMS HUB uses a global title (E.164) address from the HPMN (as per IR.75), that address could be used only for delivery

to HPMN subscribers roaming which can be routed to the roaming hub, and the VPMN could route results to the roaming hub based on the same address.

- SUA

In order to use this option, the following criteria will have to be fulfil by the roaming or SMS hub.

5. either the SMS-HUB will need to implement SUA/SCTP interface
6. either the roaming HUB will need to implement a legacy SS7 interface. In this case the roaming HUB requires a point code. Since the preferred inter-hub connection is MTP Direct Routing (ITU), roaming hubs are likely to have point codes
7. On the VPLMN side it is the same issue as it is for the other tunnelling method. The MTForwardSM result will need to be sent through the roaming HUB using the global title set by the SMS-HUB. Multiple options are available for the global title address used by the SMS-HUB. The SMS HUB uses a global title (E.164) address from the HPMN (as per IR.75), that address could be used only for delivery to HPMN subscribers roaming which can be routed to the roaming hub, and the VPMN could route results to the roaming hub based on the same address. This places an additional burden on the SMS-HUB to support this option of IR.75.

Alias GT

Since the VLR stored in the HLR is the HUB VLR, the MTForwardSM will go trough the roaming HUB without any issue, it means the it will be no problem to implement it.

A.3.2.3.1.2 Option 2: SMS-HUB Terminates SMS to VPMN

Generally, roaming hubs that use address manipulation methods are not well suited to implement this option. Most of the implementation requirements are placed upon the SMS-HUB. Since the SMS-HUB has delivery responsibility, it may be possible to provide the necessary alias-true address mappings from the roaming hub to the SMS-HUB.

Generally, the tunnelling methods are best suited for this particular option.

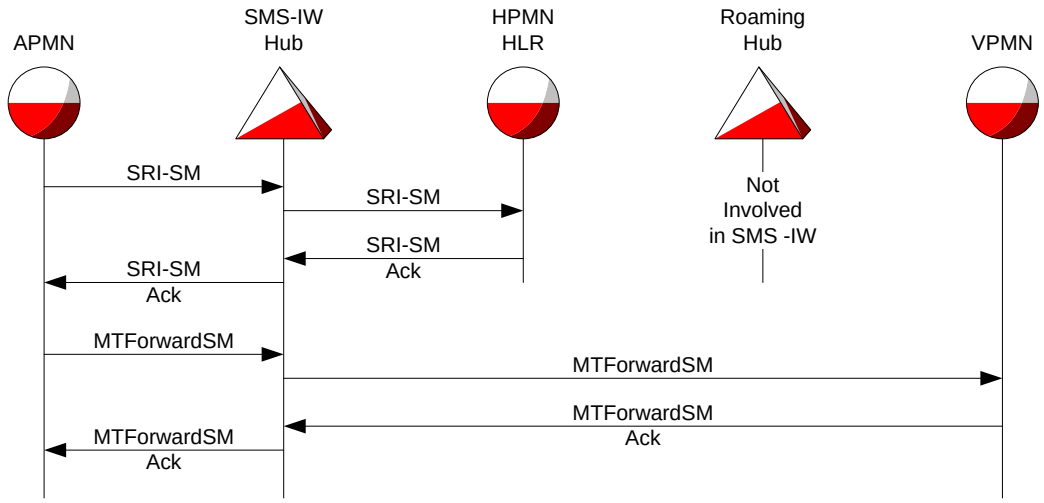

Figure 57: SMS-HUB Terminates SMS to VPMN

- MTP

In order to be able to implement this option the following condition must be fulfilled

A signalling path must be open between the SMS-HUB and the VPMN

The VPMN has to accept the traffic from the SMS-HUB.

- TT

In order to be able to terminate successfully the SMS with this option it will be needed to have a signalling path towards the VPMN and the VPMN need to open his network for the signalling coming from the SMS-HUB.

- SUA

In order to implement this option, it will be needed to have a signalling path between the VPMN and the SMS-HUB. This connection can be based on legacy C7 or any sigtran connection. It will be as well needed that the VPMN will accept this SMS traffic from the SMS-HUB.

- Alias GT

In order to terminate correctly the SMS, the SMS HUB will need to know the real VLR address, this can be achieve if the SMS-HUB is the same HUB as the roaming HUB. This option can only be implemented with alias GT in the case where the roaming HUB is offering to the VPMN the roaming and SMS interworking services.

A.3.2.3.1.3 Option 3 The HPMN uses Home SMS Router

Generally, this option is independent of the roaming hub routing method. The SMS Router is specifically intended to perform SMS screening as per 3GPP TR 23.840. It becomes the logical point of intercept for faking, spoofing, spamming, additional SMS services, lawful intercept, etc.

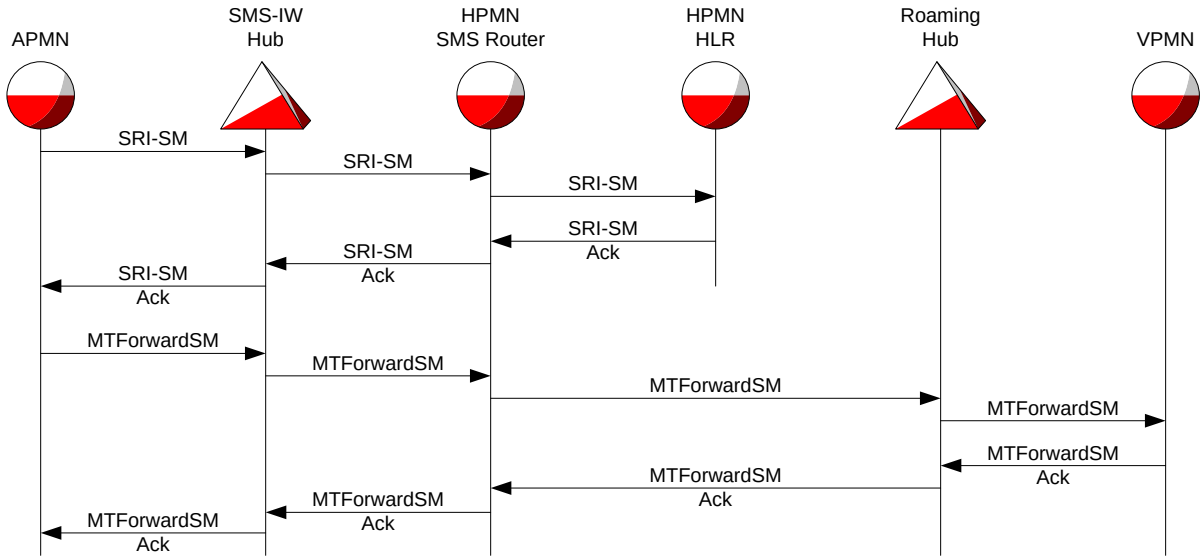

: Home SMS Router used

- MTP

To implement this option it will be no problem and the roaming HUB will be in position to screen the traffic.

- TT

To implement this option it will be no problem and the roaming HUB will be in position to screen the traffic.

- SUA

Since in this option the roaming leg is separated clearly from the interworking leg it will be no problem to implement it.

- Alias GT

According to the above signalling diagram, it is no problem to implement home routing with SMS HUB and roaming HUB using alias GT.

A.3.2.3.2 SMS-IW Agreement is Bilateral.

A.3.2.3.2.1 Option 1: Roaming HUB terminates the SMS to VPMN

Generally, the tunnelling methods are not well suited for this particular option.

Generally, the address manipulation method is best suited for this particular option. In fact it is very difficult to remove an address manipulation roaming hub from any SMS interworking and roaming option.

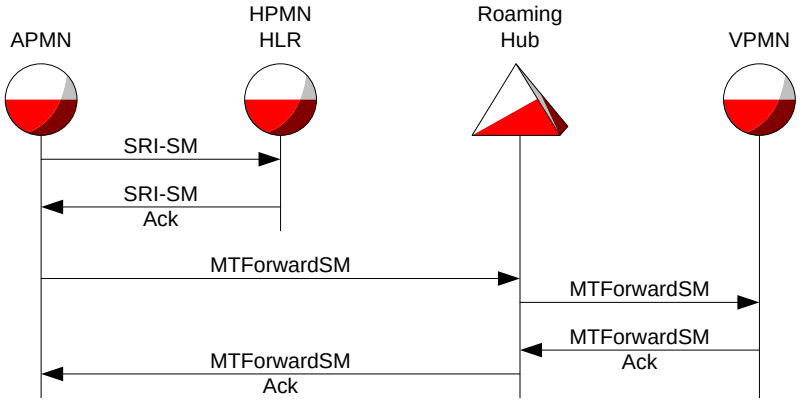

Figure 58: Roaming HUB terminates the SMS to VPMN

MTP/TT

In order to use this option, it will be needed that the roaming HUB will accept the signalling from APMN. It will be needed to have a signalling path open.

SUA

In order to implement this option, it will be needed for the APMN to have access to the roaming hub and the following conditions must be fulfil

- either the APMN will need to implement SUA/SCTP interface
- either the roaming HUB will need to implement a legacy SS7 interface. In this case it will be needed for the roaming HUB to have dedicated point code.
- On the VPLMN side it is the same issue as it is for the other tunnelling method, the result will need to be routed back through the roaming HUB depending on the IMSI contained in the MTForwardSM.

Alias GT

Since the VLR stored in the HLR is the HUB VLR, the MTForwardSM will go through the roaming HUB without any issue, it means the it will be no problem to implement it.

A.3.2.3.2.2 Option 2: APMN terminates the SMS to VPMN

Generally, the address manipulation method is not well suited for this particular option. In fact it is very difficult to remove an address manipulation roaming hub from any SMS interworking and roaming option.

Generally, the tunnelling methods are best suited for this particular option. This is identical to the current GSM architecture model defined in TS 29.002. Unfortunately, that model has many pitfalls and shortcomings as detailed in 3GPP TR 23.840. It is most subject to spoofing and spamming. It is virtually impossible for an HPMN to provide lawful intercept or compliance to other regulatory requirements when delivery of the MTForwardSM completely bypasses the HPMN. Note, this is one of the most common forms of SMS interworking in use between operators today.

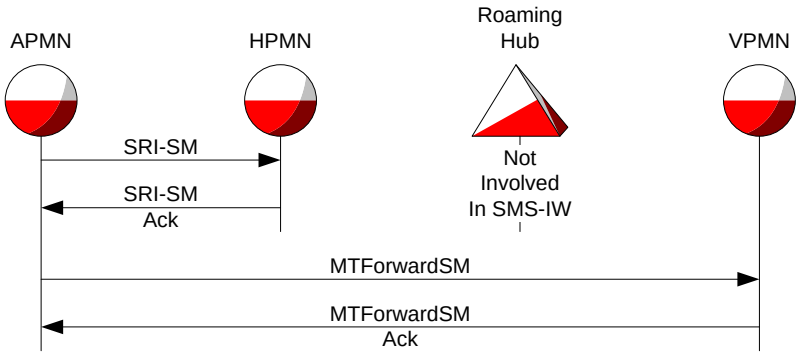

Figure 59: APMN terminates the SMS to VPMN

MTP/TT

In order to deploy this option, it will be needed to have a signalling path between the APMN and the VPMN. The VPMN will need to accept the signalling from the APMN and the route in both direction need to be open.

SUA

In order to implement this option it will be needed to have a signalling path between the APMN and the VPMN and it will be needed as well that the VPMN will accept the SMS from the APMN.

Alias GT

Since the APMN is not in position to known the real address of the VLR, the APMN is not in position to terminate this kind of SMS except if the APMN is offering roaming hub services to the VPMN. In this case the technical implementation will be similar to the option 1.

A.3.2.3.2.3 Option 3: The HPMN uses Home SMS Router

Generally, this option is independent of the roaming hub routing method. The SMS Router is specifically intended to perform SMS screening as per 3GPP TR 23.840. It becomes the logical point of intercept for faking, spoofing, spamming, additional SMS services, lawful intercept, etc.

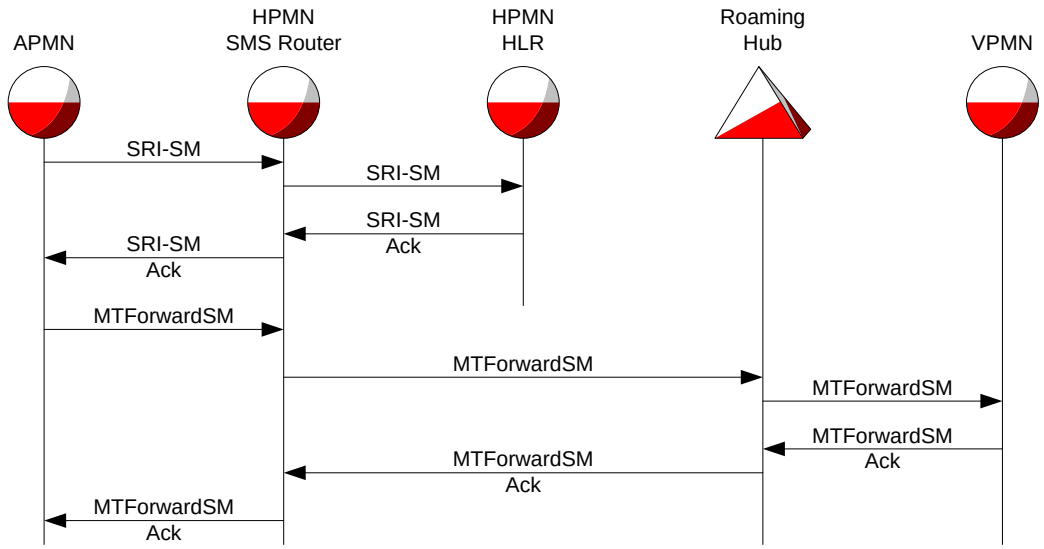

Figure 60: HPMN uses Home SMS Router

MTP/TT

Since the signalling channel is open between the HPMN and the VPMN via HUB it is no problem to transfer the MTForwardSM via the roaming HUB using the home routine.

SUA

Since at the implementation of this option, the SMS will be routed via the home network and will be terminate through the roaming path, it will be no problem to implement it.

Alias GT

According to the above signalling diagram, it is no problem to implement home routine with SMS HUB and roaming HUB using alias GT.

A.3.3 ReportSMDeliveryStatus

This message is between the SMSC and the HLR. It belongs to the interworking traffic. In the case where a SMS-HUB will be used for the SMS interworking, since it will follow the address manipulation method described in the IR75, it will be no problem.

In the case where a roaming HUB will be used for roaming and the SMS-IW agreement will be done on a bilateral way, the message will need to be routed form the APMN to the HPMN via the same way as the SRI is routed. It will be no problem for all methods.

A.3.3.1 ReadyForSM

This message is between the MSC/VLR and the HLR. It belongs to the roaming traffic

In the case where a roaming HUB is used the message is always routed via the HUB and it will be no problem for all methods.

A.3.4 AlertSC / InformSC

These messages are sent from the HLR to the SMSC and belong to the interworking traffic, in the case where a SMS-HUB will be used for SMS interworking, since it will follow the address manipulation method described in the IR.75, it will be no problem for all methods.

In the case where a roaming HUB will be used for roaming and an SMS-IW will be setup on a bilateral way, the message will need to be routed from the HPMN to the APMN in the same way that the SRI_rslt will be routed. For all methods it will be no problem.

A.3.5 MOForwardSM

This message is from the MSC/VLR to the SMSC and belongs to the roaming traffic. In the case where a roaming HUB will be used it must always go via the roaming HUB. For the Hub using the alias GT method it is needed that they can receive this message with the real address or with the alias address. It will be the responsibility of the HUB to find out a solution in order to separate this message.

A.4 SMS Interworking Anomolies

A.4.1 Traffic Separation for MTP/TT/SUA

In the pure roaming environment, it is possible for the inclusion of a roaming hub to present a routing anomoly when a tunneling method is used.

Since the VLR addresses are not manipulated, the MTForwardSM will need to be sent to the Roaming HUB. It means in the case where it is a bilateral SMS-IW agreement, it is necessary for the HPMN to route the MTForwardSM message to the roaming HUB if the IMSI contained in the message belongs to the HPMN network.

But what happens when the IMSI in the MTForwardSM does not belong to the HPMN, but is the result of the SMSC delivering an interworking SMS?

The traffic separation mechanism of the HPMN may be as simple as just routing based on the SCCP called Party Address (the visited MSC in the VPMN).

When the SMS is destined to an IMSI belonging to the HPMN, this traffic separation is completely acceptable. When interworking traffic is involved, other dependencies must be examined. Does the HPMN use an SMS-HUB for interworking? If so, then the SMS for the interworking IMSI should be passed to the SMS-HUB. If no SMS-HUB is used for interworking, then routing may not have worked prior to introduction of the roaming hub since the two operators had no agreement between them. The roaming could choose to offer the interworking service or re-route the traffic on behalf of the HPMN using the same method employed prior to the roaming hub presence.

In order to solve this issue it could be imagined that all the MTForwardSM message will be sent to the roaming hub. In this case the roaming HUB will need to provide the SCCP carrier service to the HPMN.

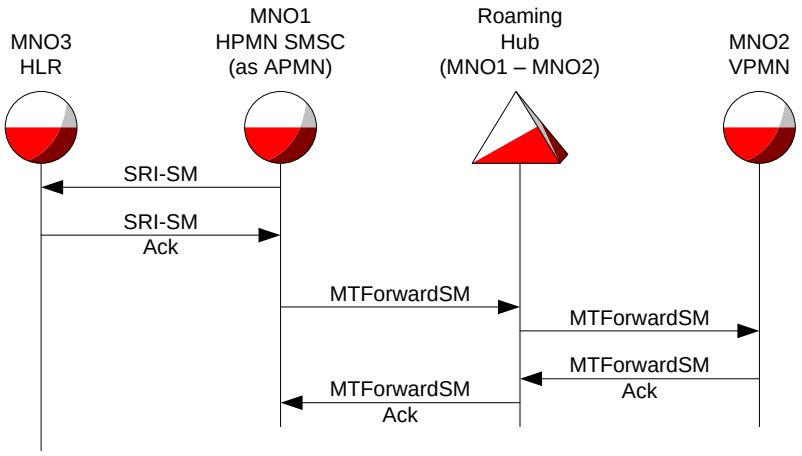

Figure 61: HUB provides the SCCP carrier service to the HPMN.

This issue is dependent upon a set of assertions:

- MNO1 and MNO2 have a Roaming Hub between them, and
- MNO1 has SMS to be delivered to an MS of MNO3, and
- MNO3 has a roaming relationship with MNO2 that does not use Alias GT Roaming Hub, and
- MS of MNO3 is roaming on MNO2, and
- MNO1 does not use an SMS-HUB for its relationship with MNO3, and
- MNO1 does not use an SMS-HUB for its relationship with MNO2, and
- MNO2 does not use an SMS-HUB for its relationship with MNO1, and
- MNO3 does not use an SMS-HUB for its relationship with MNO1, and
- MNO3 does not use a Home SMS Router, and
- MNO3 has a bilateral SMS-IW agreement with MNO1, and
- MNO3 has a bilateral SMS-IW agreement with MNO2, and
- MNO1 and MNO2 have established a SMS-IW agreement of some form that does not allow the use of a SMS-HUB.

The solution presented:

In order to solve this issue it could be imagined that all the MTForwardSM message will be sent to the roaming hub. In this case the roaming HUB will need to provide the SCCP carrier service to the HPMN.

This is only one possible approach. It is the ‘all’ of an ‘all or nothing’ approach. Other approaches are available. All MTForwardSM messages do not need to be sent to the roaming hub, and the roaming hub does not need to provide SCCP carrier service to the HPMN.

The roaming hub provides a connection between two operator’s networks, an HPMN and a VPMN. Whenever the HPMN has SMS delivery to complete toward the VPMN, it is SMS that is destined to a subscriber of the HPMN, or a subscriber of some other PMN. When the subscriber belongs to the HPMN, no problem exists with routing the MTForwardSM through

the roaming hub. When the subscriber belongs to some other PMN, the HPMN could deliver it to the VPMN through the roaming hub. It would require SMS-IW agreement between the HPMN and VPMN, and acceptance from the roaming hub provider. Since all other traffic between the HPMN and VPMN transits the roaming hub, one could include this one part of SMS interworking where all the assertions previously listed apply.

SMS-IW is a topic of traffic separation. SMS-IW traffic separation occurs within each SMSC, and an operator's choice about the use of a SMS-HUB, and/or Home SMS Router.

SMS Traffic destined from the HPMN to the VPMN can be routed through the roaming hub based on the called party address which is the serving MSC in the VPMN.

A.4.2 Address Routing Alias GT

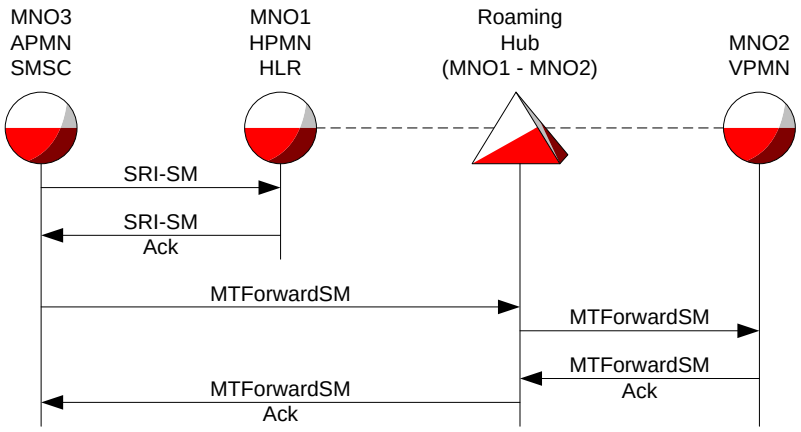

Figure 62: Alias GT routing

As an APMN, the MNO with SMS to deliver to the VPMN may receive an Alias GT serving MSC address because the destination MS belongs to an HPMN that is roaming in the VPMN, and that HPMN and VPMN use an Alias GT roaming hub. This presents the following issues

a) The APMN will require awareness of the Alias GT mapping to determine if routing is allowed.
b) The APMN will require awareness of the Alias GT mapping to determine the correct billing separation for SMS-IW as defined in AA.19.
c) If the APMN uses an SMS-HUB, the SMS-HUB will require awareness of the Alias GT mapping to determine possible hub-to-hub routing, use of private SMS extensions, blacklisting, billing separation, etc, as defined in IR.75 and AA.71
d) The international SCCP service provider of the APMN will require awareness of the Alias GT to determine appropriate routing
e) Since the APMN is not a customer of the Alias GT roaming hub in this example, how will an APMN's SMSC GT address be assigned an Alias GT so

that it is understood by the VPMN, and results routed back through the Alias GT roaming hub?

Note: This behaviour is parallel to what it is actually happening with bilateral roaming.

A.5 Conclusion

According to the signalling diagrams of previous sections, it can be concluded that the SMS-IW traffic can be transported when roaming HUBs are used. It is possible as well to have in parallel roaming HUB agreement and SMS-IW agreement towards an independent SMS hub or on a bilateral way.

Depending of the topology of the APMN, HPMN and VPMN networks, it will be possible for the PMN to choose the HUB according to connection options that the HUB are offering. Therefore the PMNs using roaming HUB have to be aware that in the case where the SMS will not be transiting via the roaming HUB, the roaming HUB will not be in position to screen this traffic and to guaranty the delivery of the message in case of mixed scenario. In order to ensure a minimum quality of service for SMS, it would be recommended that the connection between the roaming hub and the PMN is setup in a way that the roaming hub is transporting the roaming leg of the SMS whatever architecture is used. However, if the PMN chooses to have an SMS-HUB provide all SMS interworking including SMS interworking to roamers, without the involvement of a roaming hub, this choice is also available. IR.75 has a recommended preferred solution for SMS interworking to an MS while roaming. It is a pure SMS HUB solution that allows each operator to limit access to their network elements to only their chosen SMSIP for all interworking including interworking to roamers.

Annex B Document Management

B.1 Document History

Version	Date	Brief Description of Change	Approval Authority	Editor / Company
1.0	7 March 2008	Assigned IR.80 as a PRD Set definition as Non-Binding Minor wording changes to scope and purpose Removal of OCRH Architectures and BA.21 considerations section Correct heading levels in section 4. Replace section 4.3 Interoperability with SMS Interworking when Roaming with SMS Interworking document supplied by Philippe Erard	Networks group	Jaime Evans (Syniverse Technologies, Inc.
1.1	14 March 2008	Removal of section 4.3 until final agreement is reached	Networks Group	Jaime Evans (Syniverse Technologies, Inc.
1.2	16 October 2009	Remove sentences in section 3.4.4.2 concerning GSMA assigning Operator Identifiers for Alias Global Title Hubbing architecture. Add clarifying text from BA.62 to the section 2.1.3 Transparency Since the HUB is not in position to execute all the IREG test for technical reason, the HUB obligation need to be specified and it is proposed to add in the chapter “3.3 OC-Roaming Hubbing Common aspects” a subchapter about Testing Minor typos corrected	Networks Group	Jaime Evans (Syniverse Technologies, Inc.
1.3	22 June 2015	Inclusion of CR1001 – Introduction of 4G OC Roaming Hubbing. This update handles the inclusion of Diameter based roaming hubbing architectures and hub to hub interworking. Multiple typos corrected.	Networks Group	Jaime Evans (Syniverse Technologies, Inc.

B.2 Other Information

Type	Description
Document Owner	Networks Group

Editor / Company	Jaime Evans (Syniverse Technologies)

It is our intention to provide a quality product for your use. If you find any errors or omissions, please contact us with your comments. You may notify us at prd@gsma.com

Your comments or suggestions & questions are always welcome.