

LTE and EPC Roaming Guidelines
Version 14.0
16 June 2015

This is a Non-binding Permanent Reference Document of the GSMA

Security Classification: Non-confidential

Access to and distribution of this document is restricted to the persons permitted by the security classification. This document is confidential to the Association and is subject to copyright protection. This document is to be used only for the purposes for which it has been supplied and information contained in it must not be disclosed or in any other way made available, in whole or in part, to persons other than those permitted under the security classification without the prior written approval of the Association.

Copyright Notice

Copyright © 2015 GSM Association

Disclaimer

The GSM Association ("Association") makes no representation, warranty or undertaking (express or implied) with respect to and does not accept any responsibility for, and hereby disclaims liability for the accuracy or completeness or timeliness of the information contained in this document. The information contained in this document may be subject to change without prior notice.

Antitrust Notice

The information contain herein is in full compliance with the GSM Association's antitrust compliance policy.

Table of Contents

1 Introduction 6
1.1 Overview 6
1.2 Scope 6
1.3 Definition of Terms 6
1.4 Document Cross-References 8
2 Architecture 11
2.1 Architecture Models 11
2.2 Interfaces 13
2.3 Features 14
2.3.1. SGs Interface for CS Fallback and SMS over SGs 14
3 Technical Requirements and Recommendations for Interfaces 14
3.1 General requirements for Inter-PMN interfaces 14
3.1.1 Inter-PMN IP backbone network requirements 14
3.1.2 Stream Control Transmission Protocol (SCTP) 14
3.1.2.1 Introduction 14
3.1.2.2 SCTP Parameters 15
3.1.3 Diameter 16
3.1.3.1 Introduction 16
3.1.3.2 Diameter Agents 17
3.1.3.3 End to End Diameter Architecture 18
3.1.3.4 Diameter Routing 19
3.1.3.5 Diameter Transport Parameter 20
3.1.3.6 Notification of ME Identity 20
3.1.3.7 QoS for Diameter messages 21
3.2 S8 Interface 21
3.2.1 Procedures 21
3.2.1.1 General 21
3.2.1.2 SGW Selection 22
3.2.1.3 PGW Selection 22
3.2.1.4 Combined SGW/PGW Selection 23
3.2.2 GTP 23
3.2.3 PMIP 24
3.2.4 PMIP-GTP Interworking 24
3.3 S9 Interface 24
3.3.1 S9 implementation requirements 24
3.3.2 Guidelines for Diameter interface over S9 interface 25
3.4 S6a and S6d interface 25
4 Technical Requirements and Recommendations for Legacy Interworking and Coexistence 25
4.1 Legacy Interworking scenarios 25
4.1.1 Introduction 25
4.1.2 VPMN has not implemented LTE 25
4.1.3 HPMN has not implemented LTE 26

4.2 Co-existence scenarios 27
4.2.1 Introduction 27
4.2.2 Possible scenarios 27
4.2.2.1 2G/3G Roaming Agreement Only 27
4.2.2.2 2G/3G and LTE Roaming Agreement 29
4.2.3 Consequences of different APN approaches when roaming 32
4.2.3.1 Consequences of the single APN approach when roaming 32
4.2.3.2 Consequences of the dual APN approach when roaming 35
4.2.3.3 Guidance regarding the APN approach when roaming 35
4.3 Inter-RAT Handover 35
4.3.1 Handover to/from 2G/3G and LTE 35
4.3.1.1 Introduction 35
4.3.1.2 Handover restriction to/from 2G/3G and LTE (Active mode) 35
4.3.1.3 Handover restriction to/from 2G/3G and LTE (Idle mode) 37
4.3.2 Handover to/from non-3GPP accesses and LTE 37
4.3.3 Bandwidth considerations 38
4.3.3.1 Issue description and possible cause 38
4.3.3.2 Possible solutions 38
5 Technical Requirements and Recommendations for Services 38
5.1 Short Message Service (SMS) 38
5.1.1 SMS over SGs 38
5.2 Voice 39
5.2.1 CS Fallback 39
5.2.1.1 General 39
5.2.1.2 Roaming Retry for CSFB procedure 40
5.2.1.3 Roaming Forwarding for CSFB procedure 42
5.2.1.3 Coexistence of Roaming Forwarding and Roaming Retry procedures 42
5.2.1.4 Recommended procedures 42
5.2.2 LTE Voice Roaming Architecture 43
5.2.3 HSPA Voice Roaming Architecture 43
6 Other Technical Requirements and Recommendations 43
6.1 Access Control 43
6.1.1 Access Control in the VPMN 43
6.1.2 Access Control in the HPMN 44
6.1.3 Access Control in the VPMN for CS Fallback 44
6.2 Addressing 45
6.2.1 UE Addressing 45
6.2.1.1 SS7 45
6.2.1.2 IP 45
6.2.2 Network Element Addressing 46
6.2.2.1 IP and SS7 46
6.2.2.2 Fully Qualified Domain Names (FQDNs) 46
6.2.2.3 Diameter Realms 46
6.3 APN for IMS based services 46

6.3.1 Introduction 46
6.3.2 IMS well-known APN 47
6.3.2.1 Definition 47
6.3.2.2 Gateway Selection 47
6.3.2.3 Inter-PLMN roaming hand over 48
6.3.2.4 Network-initiated deactivation and re-activation of the PDN connection to the IMS well known APN 48
6.3.3 APN for Home Operator Services 48
6.3.3.1 Definition 48
6.3.3.2 Gateway Selection 49
6.3.3.3 Inter-PLMN roaming hand over 50
6.3.3.4 Network-initiated deactivation and re-activation of the PDN connection to the APN for Home Operator Services 50
6.4 Emergency PDN connection 51
6.5 Security 51
6.5.0 GTP Firewall 52
6.5.1 Diameter Security 52
6.5.1.1 Network Domain Security for IP 52
6.5.1.2 Network Layer and Transport Layer Security 54
6.5.1.3 Diameter Base Protocol Security 55
6.5.1.4 Cross-Layer Security 57
6.5.1.5 Diameter Application Security Depending on the Diameter Application (e.g. S6a, S9, Gy, ...) 58
6.5.1.6 Discovery of Peer PLMN Network Elements 58
6.5.1.7 Responsability Cascade 58
6.6 Diameter Roaming Hubbing 59
6.6.1 Direct connection 59
6.6.2 Origin/Destination realm based routing 59
6.6.3 Destination realm modification 60
6.7 Default APN 60
6A Technical Requirements for static QoS support 61
6A.1 Home Routed architecture and S8 protocol is GTP 61
6A.1.1 Limiting QoS for inbound roamers to the limits of the roaming agreement 62
6A.1.1.1 Requirements for the VPMN 62
6A.1.1.2 Requirements for the HPMN 62
6A.1.2 Enforcement of QoS by the VPMN 63
7 Technical Requirements for Dynamic Policy and Charging Control 63
7.1 Home Routed architecture and S8 protocol is GTP 63
7.1.1 Bearer management procedures for dynamic policy and charging control 64
7.1.2 Limiting QoS for inbound roamers to the limits of the roaming agreement 65
7.1.2.1 Requirements for the VPMN 65
7.1.2.2 Requirements for the HPMN 65
7.1.3 Enforcement of QoS by the VPMN 66
7.2 Home Routed architecture and S8 protocol is PMIP 66
7.3 Local Break Out architecture 67

Annex A Testing Framework **68**
Annex B Diameter Architecture Implementation **68**
Annex C Background on Security Requirements **72**
Annex D IPsec to protect IP transport **73**
Annex E: Document Management **74**
Document History 74
Other Information 77

1 Introduction

1.1 Overview

This document aims to provide a standardised view on how Long Term Evolution (LTE) and Evolved Packet Core (EPC) networks can interwork in order to provide "Next Generation Mobile Network" capabilities when users roam onto a network different from their HPMN. Expectations of the "Next Generation Mobile Network" capabilities are described in the GSMA Project Document: Next Generation Roaming and Interoperability (NGRAI) Project Scope White Paper [16].

There is much commonality between existing "Data" roaming using General Packet Radio Service (GPRS) and the capabilities and dependencies of LTE and EPC. Consequently this document makes references to current 3GPP specifications for GPRS in addition to those specifying solely LTE-Evolved Packet System (EPS) and EPC aspects, and also to other GSMA IREG PRDs. The main focus is to describe EPC over LTE, since the LTE access specifics are not covered in any other PRD. EPC over 2G/3G is also covered regarding the EPC aspects impacting the S4-SGSN and the Gn/Gp SGSN; the 2G/3G access specific aspects are covered in GSMA PRD IR.33 [10].

Throughout this PRD, the term "GPRS" is used to denote both 2G GPRS and 3G Packet Switched (PS) service.

1.2 Scope

This PRD presents material about LTE and EPC Roaming. The document addresses aspects which are new and incremental to EPC roaming in general, and using LTE access specifically: It recognises that much of the data-roaming infrastructure is reused from GPRS and High-Speed Packet Access (HSPA) Roaming, and for which information and specification is found in other PRDs.

This PRD also covers Voice and SMS services using CS Fallback (CSFB) [25] and VoLTE [30]. For VoLTE [30], only the technical guidelines in Evolved Packet Core (EPC) layer are covered.

NOTE: This version of the PRD only covers LTE and EPC roaming over 3GPP access. Roaming from non-3GPP access is not supported in this version of the document.

1.3 Definition of Terms

Term	Description
3GPP	3rd Generation Partnership Project
ACL	Access Control List
AMBR	Aggregate MBR
APN	Access Point Name
ARP	Allocation Retention Priority
BBERF	Bearer Binding and Event Reporting Function
BG	Border Gateway

CER	Capabilities-Exchange-Request
CEA	Capabilities-Exchange-Answer
CN	Core Network
CSFB	Circuit Switched FallBack
Data Off	See PRD IR.92 [30]
Data Off Enabled Service	See PRD IR.92 [30]
DDoS	Distributred Denial of Service
DEA	Diameter Edge Agent
DNS	Domain Name System
DNSSEC	Domain Name System Security Extensions
DoS	Denial of Service
DRA	Diameter Routing Agent
EPC	Evolved Packet Core
EPS	Evolved Packet System (Core)
ESP	Encapsulated Security Payload
E-UTRAN	Evolved Universal Terrestrial Radio Access Network
GBR	Guaranteed Bit Rate
GMSC	Gateway MSC
GPRS	General Packet Radio Service
GTP	GPRS Tunnelling Protocol
HLR	Home Location Register
HPMN	Home Public Mobile Network
HSPA	High-Speed Packet Access
HSS	Home Subscriber Server
HTTP	Hyper-Text Transfer Protocol
IMAP	Internet Message Access Protocol
IMEI	International Mobile Equipment Identifier
IMEISV	IMEI Software Version
IKE	Internet Key Exchange
IP-CAN	IP Connectivity Access Network
LA	Location Area
LTE	Long Term Evolution (Radio)
MAP	Mobile Application Part (protocol)
MBR	Maximum Bit Rate
MME	Mobility Management Entity
MSC	Mobile services Switching Centre
MTC	Mobile Terminating Call

OCS	Online Charging System
PCC	Policy and Charging Control
PCEF	Policy and Charging Enforcement Function
PCRF	Policy and Charging Rules Function
P-CSCF	Proxy Call Session Control Function
PGW	PDN (Packet Data Network) Gateway
PMIP	Proxy Mobile IP
PSI	Provide Subscriber Info (MAP)
QCI	QoS Class Identifier
QoS	Quality of Service
RAN	Radio Access Network
RAT	Radio Access Technology
RR	Resource Record
RTO	Retransmission Timeout (in SCTP)
RTT	Round Trip Time
SCTP	Stream Control Transmission Protocol
SEG	Security Gateway
SGSN	Serving GPRS Support Node
SGW	Serving Gateway
TA	Tracking Area
T-ADS	Terminating Access Domain Selection
TMSI	Temporary Mobile Subscriber Identity
Unsolicited downlink IP packet	An IP packet is an unsolicited downlink IP packet if: - the IP packet is sent towards the UE IP address; and - the IP packet is not related to an IP packet previously sent by the UE.
VMSC	Visited MSC
VPMN	Visited Public Mobile Network
Well-known APN	An APN whose value has a defined specific string of characters
XCAP	XML Configuration Access Protocol
XML	eXtensible Markup Language

1.4 Document Cross-References

Ref	Document Number	Title
1	3GPP TS 23.401	"GPRS Enhancements for E-UTRAN Access"
2	3GPP TS 23.402	"Architecture enhancements for non-3GPP Accesses"
3	IETF RFC 3588	"Diameter Base Protocol"
4	3GPP TS 29.274	"Evolved General Packet Radio Service (GPRS) Tunnelling

		Protocol for Control plane (GTPv2-C); Stage 3"
5	3GPP TS 29.281	"General Packet Radio System (GPRS) Tunnelling Protocol User Plane (GTPv1-U)"
6	3GPP TS 29.215	"Policy and Charging Control (PCC) over S9 reference point"
7	3GPP TS 23.003	"Numbering, addressing and identification"
8	3GPP TS 29.272	"MME and SGSN related interfaces based on Diameter protocol"
9	GSMA PRD IR.77	"Inter-Operator IP Backbone Security Requirements For Service Providers and Inter-operator IP backbone Providers"
10	GSMA PRD IR.33	"GPRS Roaming Guidelines"
11	GSMA PRD IR.34	"Inter-Service Provider Backbone Guidelines"
12	GSMA PRD IR.40	"Guidelines for IPv4 Addressing and AS Numbering for GRX/IPX Network Infrastructure and User Terminals"
13	IETF RFC 4960	"Stream Control Transmission Protocol"
14	GSMA PRD SE20	"GPRS Data Service Guidelines in Roaming"
15	GSMA PRD BA27	"Charging and Accounting Principles"
16	GSMA NGRAI	"Next Generation Roaming and Interoperability (NGRAI) Project Scope White Paper"
17	3GPP TS 29.303	"Domain Name System Procedures; Stage 3"
18	IETF RFC 3958	"Domain-Based Application Service Location Using SRV RRs and the Dynamic Delegation Discovery Service (DDDS)"
19	IETF RFC 3403	"Dynamic Delegation Discovery System (DDDS). Part Three: The Domain Name System (DNS) Database"
20	IETF RFC 5213	"Proxy Mobile IPv6"
21	GSMA PRD IR.67	"DNS/ENUM Guidelines for Service Providers & GRX/IPX Providers"
22	GSMA PRD IR.80	"Technical Architecture Alternatives for Open Connectivity Roaming Hubbing Model"
23	3GPP TS 29.275	"Proxy Mobile IPv6 (PMIPv6) based Mobility and Tunnelling Protocols"
24	3GPP TS 29.305	"InterWorking Function (IWF) between MAP based and Diameter based interfaces"
25	3GPP TS 23.272	"Circuit Switched Fallback in Evolved Packet System; Stage 2" Release 10
26	IETF RFC 6408	"Diameter Straightforward-Naming Authority Pointer (S-NAPTR) Usage"
27	3GPP TS 23.018	"Basic call handling; Technical realization" – Release 10
28	3GPP TS 32.425	"Telecommunication management; Performance Management (PM); Performance measurements Evolved Universal Terrestrial Radio Access Network (E-UTRAN)" – Release 9
29	3GPP TS 23.060	"General Packet Radio Service (GPRS); Service description; Stage 2"
30	GSMA PRD IR.92	"IMS Profile for Voice and SMS"

31	GSMA PRD IR.65	"IMS Roaming and Interworking Guidelines"
32	3GPP TS 24.301	"Non-Access-Stratum (NAS) protocol for Evolved Packet System (EPS); Stage 3"
33	3GPP TS 23.167	"IP Multimedia Subsystem (IMS) emergency sessions "
34	3GPP TS 23.203	"Policy and charging control architecture" - Release 9
35	GSMA PRD IR.23	"Organisation of GSM International Roaming Tests"
36	GSMA PRD IR.35	"End–to–End Functional Capability Test Specification for Inter-PMN GPRS Roaming"
37	3GPP TS 33.210	"Network Domain Security (NDS); IP network layer security"
38	3GPP TS 33.310	"Network Domain Security (NDS); Authentication Framework"
39	3GPP TS 23.221	"Architectural Requirements"
40	GSMA PRD IR.21	“GSM Association Roaming Database, Structure and Updating Procedures”
41	3GPP TS 23.007	"Restoration procedures"
42	GSMA PRD IR.24	"End-to-End Functional Capability Specification for Inter-PLMN Roaming (Stage 4 Testing)"
43	3GPP TS 25.413	"UTRAN Iu interface Radio Access Network Application Part (RANAP) signalling"
44	3GPP TS 48.018	"General Packet Radio Service (GPRS); Base Station System (BSS) - Serving GPRS Support Node (SGSN); BSS GPRS protocol (BSSGP)"
45	3GPP TS 36.413	"Evolved Universal Terrestrial Radio Access Network (E-UTRAN); S1 Application Protocol (S1AP)"
46	3GPP TS 29.002	"Mobile Application Part (MAP) specification"
47	GSMA PRD RCC.07	“Rich Communication Suite 5.1 Advanced Communications Services and Client Specification”
48	GSMA PRD IR.58	“IMS Profile for Voice over HSPA”
49	3GPP TS 29.213	“Policy and Charging Control signalling flows and Quality of Service (QoS) parameter mapping”
50	GSMA AA.51	IPX Definition and Releases, Version 1.0
51	3GPP TS 23.107	“Quality of Service (QoS) concept and architecture”
52	GSMA PRD IR.64	“IMS Service Centrialization and Continuity Guidelines”
53	3GPP TS 29.118	"Mobility Management Entity (MME) - Visitor Location Register (VLR) SGs interface specification"
54	GSMA PRD IR.38	"LTE and EPC Roaming Testing"
55	GSMA PRD IR.94	"IMS Profile for Conversational Video Service"

2 Architecture

2.1 Architecture Models

The following diagrams are produced based on the network diagrams from 3GPP TS 23.401 [1] and 3GPP TS 23.402 Section 4.2 [2].

There is a range of permutations of the roaming architecture dependent on whether the users' traffic is Home Routed, broken out from the Visited Network with Home Operator's application, or broken out from the Visited Network with Visited Operator's application functions only.

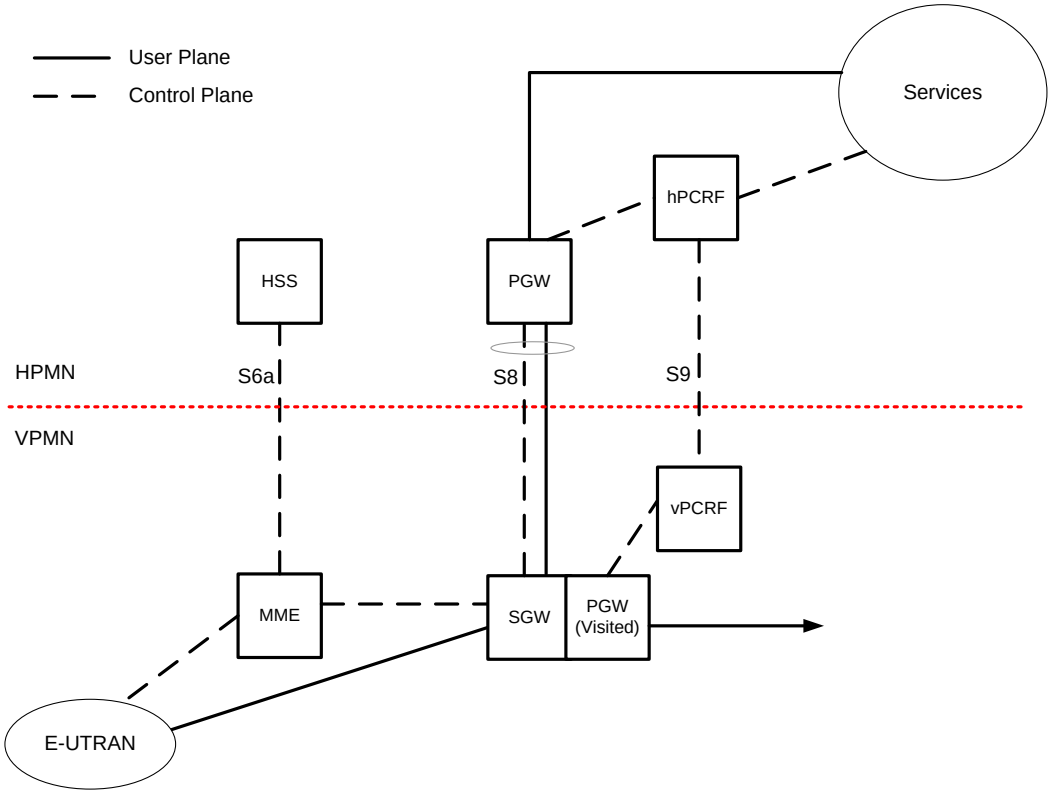

Figure 2.1-1: LTE Roaming Architecture

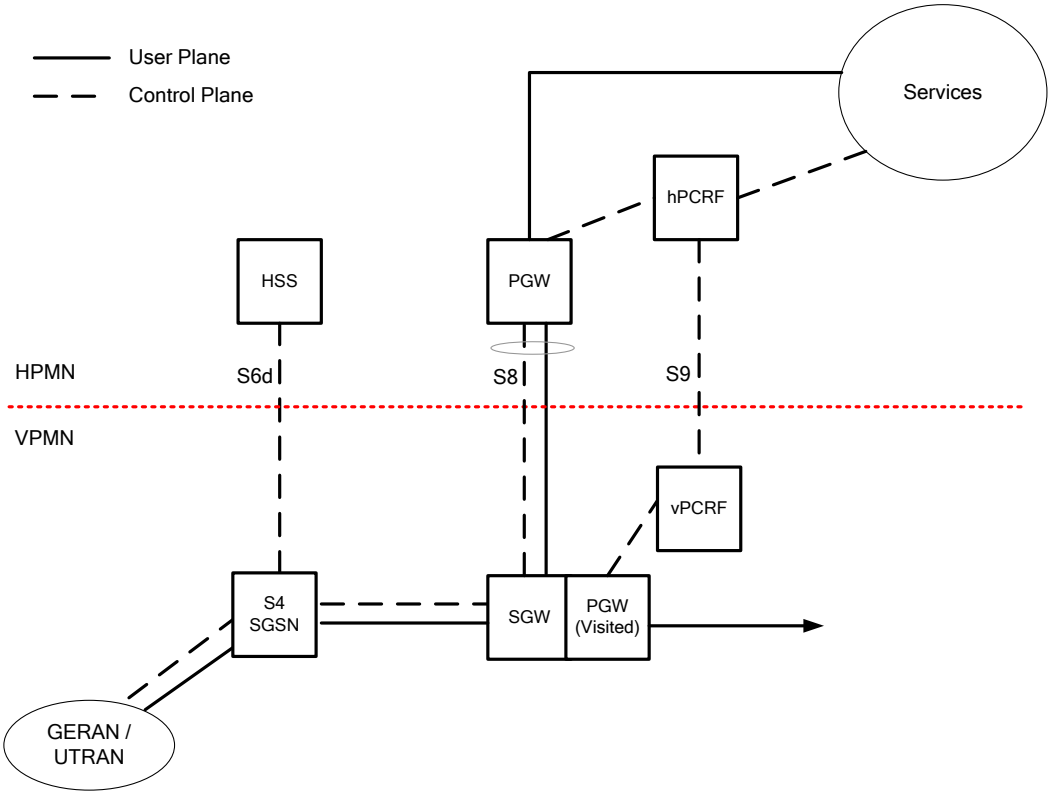

Figure 2.1-2: GERAN/UTRAN Roaming Architecture with S4 SGSN

NOTES:

The S4 SGSN can also use MAP based Gr to the HLR/HSS (see also 3GPP TS 23.060 [29]).

The S4 SGSN can also use Gp to GGSN or PGW (see also 3GPP TS23.401 [1]).

Guidelines concerning the co-existence of Gp and S8 interfaces are specified in the section 4.2 "Co-existence scenarios" of this document.

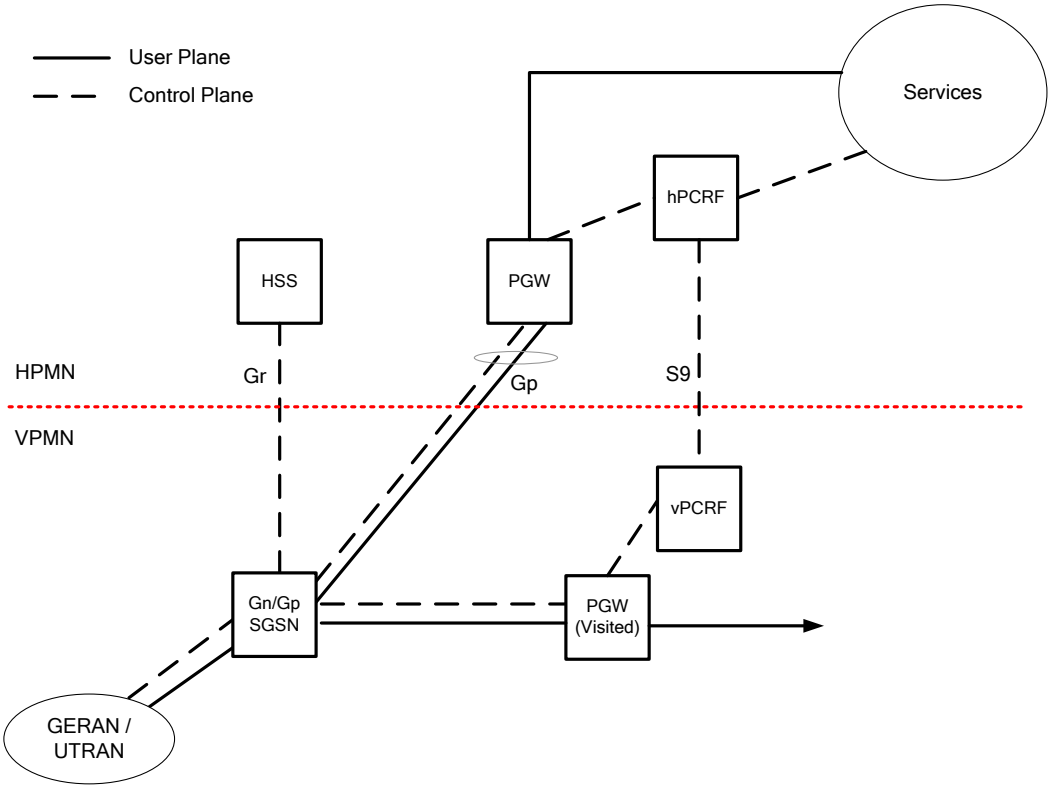

Figure 2.1-3: GERAN/UTRAN Roaming Architecture with Gn/Gp SGSN connected to PGW

NOTE: Roaming from non-3GPP access is not supported in this version of the document.

2.2 Interfaces

The following interfaces are relevant for LTE and EPC roaming and are detailed as follows:

Nodes	Interface ID	Protocol
MME - HSS	S6a	Diameter Base Protocol (IETF RFC 3588 [3]) and 3GPP TS 29.272 [8])
S4-SGSN - HSS	S6d	Diameter Base Protocol (IETF RFC 3588 [3]) and 3GPP TS 29.272 [8])
	Gr	See Notes below
SGW - PGW	S8	GTP (GTP-C 3GPP TS 29.274 [4] and GTP-U 3GPP TS 29.281 [5]) or PMIP (IETF RFC 5213 [20]) and 3GPP TS 29.275 [23])
hPCRF - vPCRF	S9	Diameter Base Protocol (IETF RFC 3588 [3]) and 3GPP TS 29.215 [6])

Table 2.2-1: Relevant interfaces for LTE and EPC roaming

NOTES:

- For Gr and Gp interfaces, see GSMA PRD **IR.33** [10].
- For co-existence of Gp and S8 interfaces, see section 4.2 "Co-existence scenarios" of this document.
- The procedures and message flows for all the above interfaces are described in 3GPP TS 23.401 [1] and 3GPP TS 23.402 [2].
- The Serving GPRS Support Node - Home Subscriber Server (SGSN – HSS) interface may be either S6d (Diameter) or Gr (MAP), depending on co-platform legacy situation.
- The inter-PMN Domain Name System (DNS) communications interface (used by the SGSN to find a Gateway GPRS Support Node (GGSN) and by MME/SGSN to find a PGW) uses standard DNS procedures and protocol, as specified in IETF RFC 1034 [5] and IETF RFC 1035 [6].

The charging requirements for LTE in a roaming environment are detailed in GSMA PRD BA.27 [15].

2.3 Features

2.3.1. SGs Interface for CS Fallback and SMS over SGs

A VPMN with LTE plus GSM and/or UMTS access(es) must support the SGs interface as defined in 3GPP TS 23.272 [25] for supporting CS Fallback and SMS over SGs for its inbound roamers. The details of how the SGs interface is used are described in Section 5.1 and Section 5.2 of the present document.

3 Technical Requirements and Recommendations for Interfaces

3.1 General requirements for Inter-PMN interfaces

3.1.1 Inter-PMN IP backbone network requirements

The requirements for IP addressing and routing are contained within GSMA PRD IR.33 [10], GSMA PRD IR.34 [11] and GSMA PRD IR.40 [12]. In addition, the GRX/IPX DNS (as per PRD IR.67 [21]) is used.

It is considered that the GRX/IPX is a trusted environment and therefore there is no need for additional security functions over and above those specified in this document and in GSMA PRD IR.34 [11].

3.1.2 Stream Control Transmission Protocol (SCTP)

3.1.2.1 Introduction

The Stream Control Transmission Protocol (SCTP), as defined in IETF RFC 4960 [13], is specified for the transport of the Diameter Base Protocol (IETF RFC 3588 [3]) in 3GPP TS 29.272 [8].

SCTP was originally designed to transport Public Switched Telephone Network (PSTN) signalling messages over IP networks, but is recognised by the IETF as being capable of broader usage.

SCTP is a reliable transport protocol operating on top of a connection-less packet switched network protocol such as IP. It offers the following services to its users:

1. acknowledged error-free non-duplicated transfer of user data,
2. data fragmentation to conform to discovered path MTU size,
3. sequenced delivery of user messages within multiple streams, with an option for order-of-arrival delivery of individual user messages,
4. optional bundling of multiple user messages into a single SCTP packet,
5. network-level fault tolerance through supporting of multi-homing at either or both ends of an association.

The design of SCTP includes appropriate congestion avoidance behaviour, and a resistance to flooding and masquerade attacks.

3.1.2.2 SCTP Parameters

It is recommended that the IETF default values defined in IETF RFC 4960 [13] Section 15 are used for the following parameters:

Parameter	Value
RTO.Alpha	1/8
RTO.Beta	1/4
Valid.Cookie.Life	60 sec
Max.Init.Retransmits	8 attempts
HB.interval (Heartbeat interval)	30 sec
Max.Burst	4
HB.Max.Burst	1

Table 3.1.2.2-1: Table of SCTP Parameters set as in IETF RFC 4960 [13]

The settings of Retransmission Timeout (RTO) and Retransmission Attempt parameters are set to optimise early discovery of path or endpoint failure, while reducing the impact of randomly lost packets.

The setting of the RTO parameters is linked to the engineered Round Trip Time (RTT) for the connection.

- **RTO.min** should be set to the roundtrip delay plus processing needed to send and acknowledge a packet plus some allowance for variability due to jitter; a value of 1.15 times the Engineered RTT is often chosen.
- **RTO.max** is typically three (3) times the Engineered RTT.
- **RTO.Initial** is typically set the same as RTO.Max.
- **Path.Max.Retrans** parameter value is the maximum number of retransmissions on a single path, before a path is dropped. It needs to be set large enough to ensure that randomly lost packets to do cause a path to drop accidently. Typical values are 4

Retransmission (per destination address) for a Single-Homed association, and 2 Retransmission (per destination address) for a Multi-Homed association.

- **Association.Max.Returns** parameter value is the maximum number of retransmissions for a give association (which may comprise multiple paths). It is typically set to Path.Max.Retrans times "Number of paths".

Parameter	Value
RTO.Initial	Value of RTO.Max (IETF RFC 4960 default 3s)
RTO.Min	1.15 * Engineered RTT – See notes below (RFC 4960 default 1 sec)
RTO.Max	3 * Engineered RTT– See notes below (IETF RFC 4960 default 60sec)
Association.Max.Retrans	Value of Path.Max.Retrans * Number of paths. (IETF RFC 4960 default 10 Attempts)
Path.Max.Retrans	2 or 4 attempts (per destination address) depending on single/multi Homing architecture (IETF RFC 4960 default 5 attempts per destination address)
SACK Delay	0 sec added (IETF RFC 4960 requirement: Delay must be <500ms)
SACK Frequency	1 (This means that every packet containing any data chunks is to be acknowledged individually)
Chunk Bundling Time	10-15ms

Table 3.1.2.2-2: Table of SCTP Parameters derived from IETF RFC 4960 [13]

NOTES:

- It is recognised that setting RTO parameters per destination is not practical, unless all SCTP traffic is being forwarded to a single or low number of sites handling a "Hub function".
- GSMA PRD **IR.34** Section 8.3.2 [11] contains a table of roundtrip delays between endpoints throughout the world. The maximum value in this table is of the order of 650ms and the minimum value of the order of 50ms.
- The dynamic value of RTO rapidly adjusts to a value marginally greater than the current Round Trip Time (RTT) of the path: the RTO.Initial, RTO.Max and RTO.Min parameter set the boundary conditions for this convergence.
- Accordingly if it is desired to choose a set of universal values for all destinations, then the values of RTO.Max and RTO.Initial should be 2 sec, and the value for RTO.Min should be set to 60ms. Further experience with the use of SCTP over the GRX/IPX is needed to assess the benefits of tuning RTO parameters.

3.1.3 Diameter

3.1.3.1 Introduction

3GPP TS 23.401 [1] and TS 23.402 [2] define a direct Diameter interface between the network elements of the visited network (Mobility Management Entity (MME), Visited Policy and Charging Rules Function (vPCRF) and SGSN) and the network elements of the home Network (HSS and Home Policy and Charging Rules Function (hPCRF)). Diameter Base

Protocol (IETF RFC 3588 [3]) defines the function of Diameter Agents. Diameter Extended NAPTR (IETF RFC 6408 [26]) defines enhancements to the Diameter Routing mechanisms.

3.1.3.2 Diameter Agents

In order to support scalability, resilience and maintainability, and to reduce the export of network topologies, the use of a PMN-edge Diameter agent is strongly recommended. The Diameter agent is named Diameter Edge Agent（DEA) hereafter. The DEA is considered as the only point of contact into and out of an operator's network at the Diameter application level. For network level connectivity see Section 3.1.1.

The Diameter Base Protocol [3] defines four types of Diameter agent, namely Diameter Relay agent, Diameter Proxy agent, Diameter Redirect agent and Diameter Translation agent. For signalling in LTE Roaming only the Relay agent, the Proxy agent and the Translation Agent are relevant.

"Diameter Relay" is a function specialised in forwarding Diameter messages.

- A Relay agent does NOT inspect the actual contents of the message.
- When a Relay agent receives a request, it will route messages to other Diameter nodes based on information found in the message, for example, Application ID and Destination-Realm. A routing table (Realm Routing Table) is looked up to find the next-hop Diameter peer.
- A Relay Agent is non-application aware, i.e. it keeps transaction state but does not keep session state.

"Diameter Proxy" includes the functions of Diameter Relay and the following in addition:

- The biggest difference from Diameter Relay is that a Diameter Proxy CAN process non-routing related AVPs. In other words, a Diameter Proxy can actually process messages for certain Diameter applications.
- Therefore, a Diameter Proxy CAN inspects the actual contents of the message to perform admission control, policy control, add special information elements (AVP) handling.
- A Diameter proxy is application aware: it maintains state of downstream peers to enforce resources usage, provide admission control and provisioning.

“Diameter translation” agent provides translation between two protocols (e.g. RADIUS<->Diameter, TACACS+<->Diameter).

- They can be used for interworking scenarios described in [section 4].

According to its Realm Routing Table, a DEA can act as a Proxy for some Diameter applications (that is add/drop/modify AVP, perform AVP inspection, and so on.) while acting as a Relay for all others (that is simply route messages based on Application ID and Destination-Realm). However, one Diameter equipment can only advertise itself as one type of Agent to one Diameter peer.

It is recommended that the DEA advertises the Relay application ID to the outer Diameter peers. By using the Relay, inter PMN routing is independent from inner domain applications. Note that the DEA is free to advertise the Proxy ID to inner Diameter peers.

It is therefore recommended that any DEA is able to relay or proxy all applications supported by the PMN to inner proxies, inner relays or inner destination agents.

However, if the above mentioned recommendations cannot be implemented by PMN, the PMN may outsource the deployment of Diameter Relay to IPX, through IPX Diameter Agent.

It is strongly recommended to deploy Diameter proxies for each Diameter application supported by the PMN, through IPX Diameter Agent. They can be implemented inside the PMN inner domain, inside the DEA or outsourced to the IPX provider. This is to provide functionalities such as admission/access control, policy control, add special information elements (AVP) handling. The DEA or the IPX Diameter Agent also provide topology hiding to protect the network elements and addresses from being exposed to foreign networks. The implementation of the topology hiding should not impair others features related to path validation.

3.1.3.3 End to End Diameter Architecture

Figure 3.1.3.3-1 is a logical architecture that illustrates, at the Diameter application level, the position of the DEA in the PMN. They are the Diameter flow point of ingress to the PMN.

Border Gateways are not presented in this logical architecture as they are not involved in Diameter procedures but the DEAs must be secured by the Border Gateways as any other equipment exposed to the GRX/IPX unless they are outsourced to IPX providers.

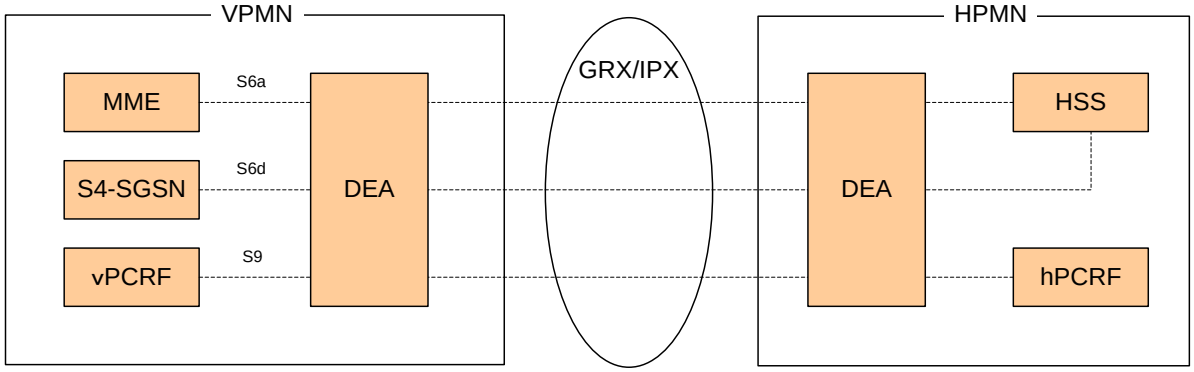

Figure 3.1.3.3-1: Diameter Roaming Implementation Architecture

Figure 3.1.3.3-2 illustrates a possible end to end Diameter Architecture implementation. It is a practical implementation with two DEAs ensuring load balancing and resiliency.

Please refer to Annex B for a complete description of possible architecture implementations.

The interconnection between PMN can be implemented according the three IPX connectivity options defined in AA.51 [50]:

- Bilateral Transport only connectivity,with direct peer connections between DEAs and no IPX Diameter Agent in between, as shown in Figure 3.1.3.3-1

- Bilateral Service Transit mode with PMN interconnection provided by IPX Diameter Agents.
- Multi-lateral Service Transit mode with PMN interconnection provided by IPX Diameter Agents.

As mentioned in AA.51 [50], the two latter cases (Bilateral and Multi-lateral) define two different business models but are similar from a service connectivity perspective, as shown in Figure 3.1.3.3-2.

The IPX Agent is also known as IPX Service Hub.

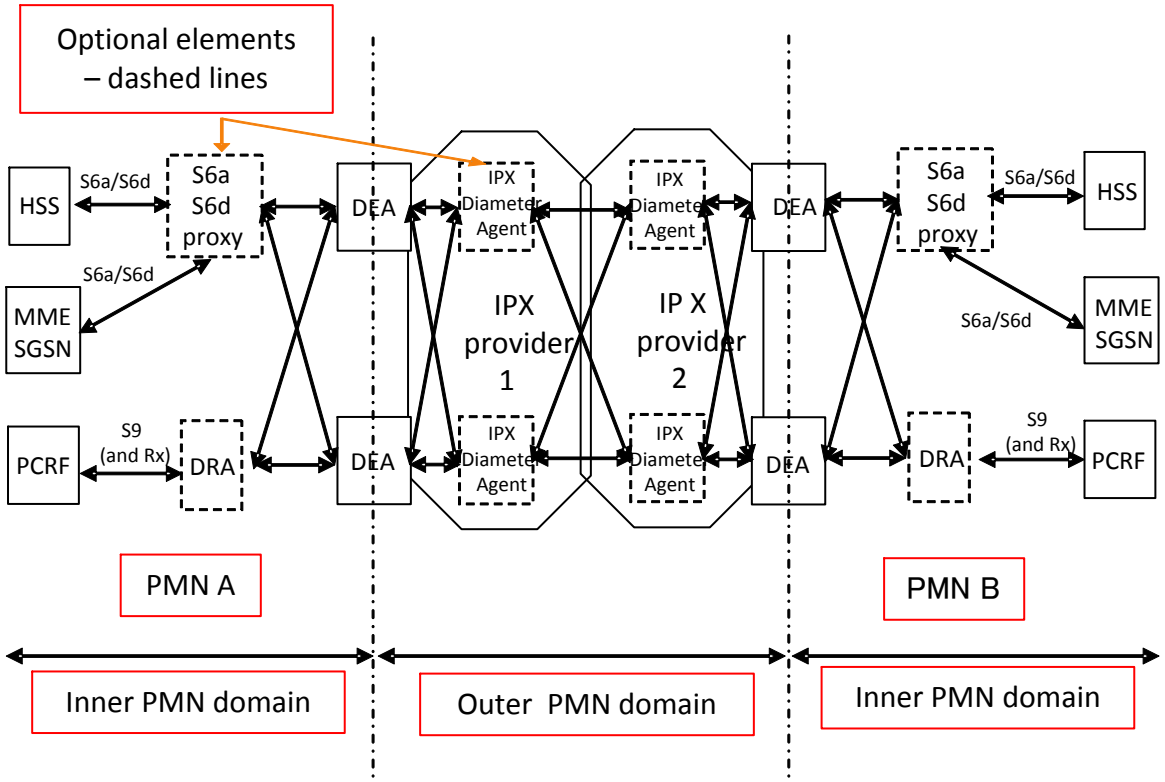

Figure 3.1.3.3-2: End to end Diameter Architecture

NOTE: The DRA (Diameter Routing Agent) shown in the figure above is defined in 3GPP TS 29.213 [49]. A DRA is a proxy or a redirect agent, which ensures that all Diameter sessions established over the Gx, S9, Gxx and Rx reference points for a certain IP-CAN session reach the same PCRF when multiple and separately addressable PCRFs have been deployed in a Diameter realm. Note that a PMN that does not have multiple instances of EPC elements does not necessarily require DRA.

3.1.3.4 Diameter Routing

Diameter Routing on international network shall be performed based on the destination-realm AVP.

Therefore, it is mandatory to use the standard realm as detailed in 3GPP 23.003 [7] section 19.2:

“epc.mnc<MNC>.mcc<MCC>.3gppnetwork.org".

The DEA or IPX Diameter Agent can discover the "next hop" agent using the search order recommended in Section 5.2 of IETF RFC 3588 [3] excluding the step 2). This results to the following recommended search order:

1. The DEA consults its list of manually configured Diameter agent locations (that is static Routing Table entries); this list could derive from the IR.21 database [40].
2. The DEA performs a NAPTR query (RFC 3403) for a server in a particular realm (for example, the HPMN or the roaming hub). In this case, a GRX/IPX DNS (as per PRD IR.67 [21]) is used.
   - These NAPTR records provide a mapping from a domain to the SRV record for contacting a server with the specific transport protocol in the NAPTR services field.
   - The services relevant for the task of transport protocol selection are those with NAPTR service fields with values "AAA+D2x", where x is a letter that corresponds to a transport protocol supported by the domain (D2S for SCTP).
3. If no NAPTR records are found, the requester directly queries for SRV records: _diameter._sctp.<realm>. In this case, the GRX/IPX DNS (as per PRD IR.67IR.67 [21]) is used.

The use of NAPTR query (step 2 above) is recommended for DEA discovery (the mechanism used by the outgoing DEA to determine the address on the far-end DEA) in the case of direct bilateral roaming. The realm referred above means the Home Network Realm of the Root Network Access Identifier (NAI) described in Section 19 of 3GPP TS 23.003 [7].

Diameter request routing and forwarding decision is always tied to specifically supported applications unless Relay Agents are used. That means a DEA implemented as a Proxy Agent and possible Proxy Agent based Hubs shall support those applications that are required (such as S6a, S6d and/or S9) to enable inter-operator roaming. Support for new applications must be added as they are required on the roaming interfaces.

The specific Relay Application ID 0xffffffff (in hexadecimal) as assigned by the IETF needs to be advertised for a Diameter Relay Agent towards a VPMN.

Each of the three steps above has different security implications which are dealt with in Section 6.5 and in Appendix C.

NOTE: To facilitate troubleshooting, Diameter End Point hostname is recommended to include its network function or any deviation of this (e.g. “mme”, “hss1”…).

3.1.3.5 Diameter Transport Parameter

It is recommended that the default value defined in Section 12 of IETF RFC 3588 [3] is used for Timer Tc, which is 30 sec. The Tc timer controls the frequency that transport connection attempts are done to a peer with whom no active transport connection exists.

3.1.3.6 Notification of ME Identity

MME must obtain ME Identity (IMEISV) of the device as part of the E-UTRAN Initial Attach procedure as specified in 3GPP TS23.401 [1]. The MME must then deliver the ME Identity to HPLMN as Terminal-Information AVP in the Update Location Request message to HSS, as

specified in 3GPP TS29.272 [8]. If IMEI AVP is present in the Terminal-Information AVP, then the Software-Version AVP must also be present.

If MME detects that the ME Identity is changed, the MME must notify HSS about an update of the ME Identity using the Notification Procedure as specified in 3GPP TS29.272 [8]. If IMEI AVP is present in the Terminal-Information AVP in the Notify Request message, then the Software-Version AVP must also be present.

3.1.3.7 QoS for Diameter messages

Both HPMN and VPMN must procure the QoS using the DiffServ Code Point (DSCP).The recommended DSCP values are defined in PRD IR.34 Section 6.2.7 [11].

3.2 S8 Interface

3.2.1 Procedures

3.2.1.1 General

The Serving Gateway (SGW) and PDN (Packet Data Network) Gateway (PGW) selection procedures specified for the EPS in 3GPP TS 29.303 [17] include relevant changes with respect to the GGSN discovery procedures defined in previous releases of 3GPP:

- The Release 8 behaviour includes the existing GPRS procedures plus additional functionality since the PGW (as opposed to the GGSN) now can support more than one protocol (GPRS Tunnelling Protocol (GTP) and now Proxy Mobile IP (PMIP)) and there is sometimes a desire to have the PGW and SGW collocated or topologically close to each other with respect to the network topology.
- New DNS records are required to distinguish between different protocols and interfaces and assist in the more complicated selections.

Selection is performed using the S-NAPTR procedure ("Straightforward- Name Authority Pointer (NAPTR)" procedure), which requires DNS NAPTR records to be provisioned as described in IETF RFC 3958 [18].

IETF RFC 3958 [18] describes the Dynamic Delegation Discovery System (DDDS) application procedures for resolving a domain name, application service name, and application protocol to target server and port by using both NAPTR and SRV resource records. It also describes how, following the DDDS standard, the NAPTR records are looked up, and the rewrite rules (contained in the NAPTR records) are used to determine the successive DNS lookups until a desirable target is found.

NOTE: The S-NAPTR use of the NAPTR resource record is exactly the same as defined in IETF RFC 3403 [19] from the DNS server and DNS infrastructure point of view.

The PMN operator shall provision the authoritative DNS server responsible for the APN-FQDN with NAPTR records for the given APN-FQDN and corresponding PGWs under the APN-FQDN.

Assuming the SGW is in the visiting network and the APN to be selected is in the home network then the S-NAPTR procedure shall use "Service Parameters" that select the interface (S8 in this case) and the protocol (either GTP or PMIP).

In all cases, the S-NAPTR procedure returns an SRV record set (a set of FQDNs identifying potential PGW and SGW candidates), or an A/AAAA record set (IP addresses identifying potential PGW and SGW candidates), or a DNS error.

When provisioning NAPTR records in the DNS, NAPTR flags "a" for A/AAAA records or "s" for SRV records should always be used. The use of NAPTR flag "" should be avoided. If used, the precautions mentioned in Section 4.1.2 of 3GPP TS 29.303 [17] shall be taken into consideration.

3.2.1.2 SGW Selection

SGW selection is performed by the MME/SGSN at initial attach or PDN connection establishment procedure. This occurs in the VPMN or the HPMN (non-roaming scenarios).

SGW selection is performed by using the S-NAPTR procedure with:

- "Service Parameters" = {desired reference point, desired protocol}
- "Application-Unique String" = the TAI FQDN (per 3GPP TS 23.003 [7])

For example, in a roaming scenario with Home routed traffic (S8) and assuming there is a choice between PMIP and GTP protocols, the MME/SGSN performs SGW selection using the S-NAPTR procedure with:

- "Service Parameters" = {"x-3gpp-sgw:x-s8-gtp", "x-3gpp-sgw:x-s8-pmip"}
- "Application-Unique String" = tac-lb<TAC-low-byte>.tac-hb<TAC-high-byte>.tac.epc.mnc<MNC>.mcc<MCC>.3gppnetwork.org

NOTE: Strictly speaking, SGW selection is outside the scope of this PRD, but is applicable during the PGW/SGW collocated case**.**

3.2.1.3 PGW Selection

3.2.1.3.1 HPMN Roaming

PGW selection is performed by the MME/SGSN at initial attach or PDN connection establishment.

PGW selection is performed by using the S-NAPTR procedure with:

- "Service Parameters" = {desired reference point, desired protocol}
- "Application-Unique String" = the APN FQDN (per 3GPP TS 23.003 [7])

For example, in a roaming scenario with Home routed traffic (S8) and assuming there is a choice between PMIP and GTP protocols, the MME/SGSN performs PGW selection using the S-NAPTR procedure with:

- "Service Parameters" = {"x-3gpp-pgw:x-s8-gtp", "x-3gpp-pgw:x-s8-pmip"}
- "Application-Unique String" = <APN-NI>.apn.epc.mnc<MNC>.mcc<MCC>.3gppnetwork.org

In addition, the VPMN SGSNs must support the Gateway selection procedure defined in TS 23.060 Annex A [29] including the UE-capability based gateway selection procedure (based on which an SGSN can be configured to give priority towards SGW/PGW for LTE capable UEs as defined in TS 23.060, Section 5.3.7.1 [29]).

This is required to ensure service continuity for a LTE roamer when moving from GERAN/UTRAN coverage to LTE one in some of the coexistence scenarios described in chapter 4.2.

3.2.1.3.2 VPMN Roaming

The details of selecting a PGW in VPMN are same as for HPMN Roaming, which is described in the previous section. Section 3.2.1.4 of this document describes further details of local PGW selection for LTE Voice Roaming architecture.

3.2.1.4 Combined SGW/PGW Selection

For locally routed traffic (local break-out in the VPMN) then PGW/SGW collocation is possible. In this case the MME/SGSN compares the two record sets (one for PGW and one for SGW candidates) and looks for a match of the canonical-node name (which conveys a collocated SGW/PGW):

- If there are multiple PGW/SGW collocated nodes in the two (2) record-sets, weights and priorities are used to select the optimal collocated PGW/SGW that serves the user's cell.
- If there is a failure to contact the collocated node, the non-collocated nodes are used.

3.2.2 GTP

The S8 interface (GTP based) uses GTP version 1 for the User plane, and GTP version 2 for the Control plane. Nodes supporting the S8-GTP based interface are compliant to 3GPP TS 29.274 [4] Release 8 or later, and 3GPP TS 29.281 [5] Release 8 or later. Accordingly fallback to GTP version 0 is no longer supported; this has significance if hybrid networks containing legacy nodes are sharing infrastructure.

Additionally, the end user billing depends on the VPMN. Different approaches could be implemented by the HPMN to identify the VPMN in real time, using the following GTP signalling information:

- SGW IP address
- MCC/MNC information, present in Serving Network and/or User Location Information (ULI) IE as specified in 3GPP TS 29.274 [4]

The major drawbacks of using SGW IP addresses are the following:

- IP addresses change frequently and could cause billing issues if not known by the HPMN Online Charging System. Whereas, the MCC/MNC combination clearly identifies the VPMN.
- SGW IP addressing may not be clear when network sharing is implemented.

If a problem occurs in the HPMN, it cannot be unambiguously identified in which VPMN's radio coverage the subscriber is roaming, as this is usually determined by the presented SGW IP address. As a result, the roaming subscriber could be billed by the HPMN for roaming in a VPMN that was never actually visited by the subscriber.

It is then highly recommended for all VPMNs to ensure that the Serving Network GTP Information Element is included in the GTP "Create Session request" and the "Update Session request" messages from the VPMN to the HPMN, in order to convey to the HPMN the VPMN used by the subscriber. The HPMN then has the possibility to extract this information to enable the billing system to unambiguously identify the correct VPMN in which the subscriber has roamed.

This mechanism will significantly reduce the requirements on HPMN Online Charging Systems to frequently update their SGW IP address databases.

Note: The GTP Serving Network and/or ULI IE are specified in 3GPP TS 29.274 [4] and contain the MCC and MNC combination for the network operator.

3.2.3 PMIP

Nodes supporting the S8-PMIP based interface are compliant to 3GPP TS 23.402 [2] and 3GPP TS 29.275 [23] Release 8 or later.

3.2.4 PMIP-GTP Interworking

The PMIP-GTP interworking is not supported by 3GPP specifications. The PMN supporting PMIP must deploy GTP based S8 or Gp interface in order to interwork with GTP-S8/Gp based PMN, unless the GTP-S8 based PMN also deploys PMIP based S8.

3.3 S9 Interface

3.3.1 S9 implementation requirements

The S9 interface implementation can be necessary if the service requires dynamic policy and charging control from the HPMN.

S9 existence depends on the roaming architecture and S8 protocol.

S8 protocol / Architecture	GTPv2	PMIP
Home Routed	Not required	Required (See note below)
Local Break Out	Required (See note below)	Required (See note below)

NOTE: Only if dynamic policy and charging control with home network control is required.

Table 3.3.1-1: S9 interface implementation

3.3.2 Guidelines for Diameter interface over S9 interface

The S9 interface between PCRFs implements Diameter. Parameters and guidelines for the Diameter protocol will be same as those of S6a (see Sections 3.1.3 and 3.4).

3.4 S6a and S6d interface

For S6a and S6d interfaces, the guidelines described in Section 3.1.3 apply.

If both HPMN and VPMN have S6d capability, S6d can be used. The use of S6d must be agreed between two PMNs as part of their bilateral roaming agreement.

If aforementioned condition is not met, then the interface between HSS and SGSN is Gr (GSM-MAP). If HPMN have Diameter-only HSS or if VPMN have S6d-only SGSN, a Diameter-MAP IWF must be implemented in between HPMN and VPMN. The responsibility of the IWF implementation belongs to the PMN that does not support the MAP Gr interface. The IWF can be outsourced to IPX, but this must be done by the responsible PMN.

4 Technical Requirements and Recommendations for Legacy Interworking and Coexistence

4.1 Legacy Interworking scenarios

4.1.1 Introduction

It is anticipated that most commercial LTE-device roaming configurations will use Release 8 (or later) capabilities at the Home and Visited networks (in HSS, SGW, PDN Gateway, and if applicable PCRFs).

There are two options for the support of authentication, registration and subscription download when roaming to Release 8 SGSNs. This scenario will typically occur when both networks support LTE. The two options are to either continue using MAP based Gr interface, or to use the Diameter based S6d interface.

4.1.2 VPMN has not implemented LTE

In cases where the Visited Network has not implemented LTE, then the roaming takes place in accordance with GPRS/HSPA recommendations. In particular:

- It is assumed that the MAP-Diameter IWF function is performed by the EPS operator.
- The PDN Gateway in HPMN implements the Gp interface towards the SGSN in VPMN.
- The HPMN implements the Gr interface or supports Gr functionality via an IWF to enable the authentication of its customers in the VPMN.
- From the 2G/3G VPMN, the EPS HPMN "looks like" a GPRS network.
- No changes to the existing GTPv1 and MAP roaming interfaces at the VPMN are required.

The architecture is shown on Figure 4.1.2-1 below:

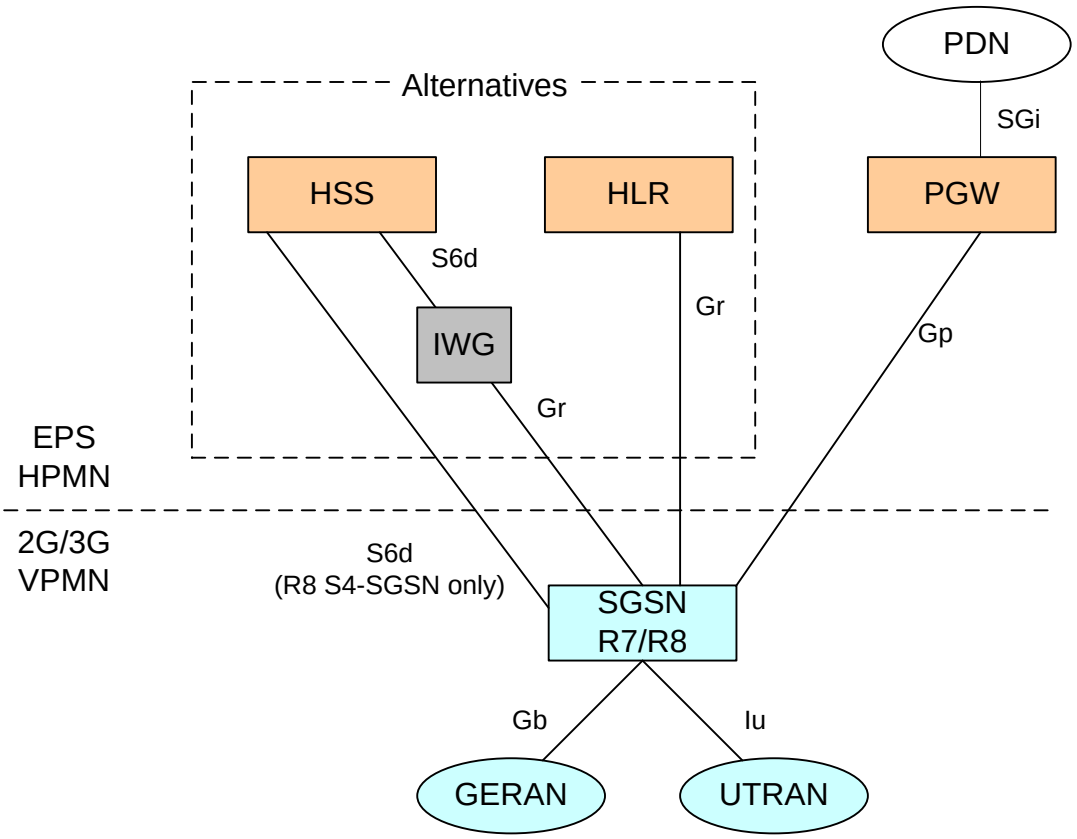

Figure 4.1.2-1: VPMN Legacy Roaming Architecture

4.1.3 HPMN has not implemented LTE

In cases where the Home Network has not implemented LTE, then it is likely that the VPMN and the HPMN have not signed an LTE addendum to their Roaming Agreement. Such a case is described in Section 6.2.2 and the HPMN subscribers shall not be allowed to attach to the Enhanced Universal Terrestrial Radio Access Network (E-UTRAN). This does not prevent the customers of the 2G/3G HPMN accessing the home routed application by attaching to the 2G/3G networks in the VPMN (if available and a 2G/3G roaming agreement exists with the HPMN).

It has to be noted that service disruption risk for inbound roamers is very high in that scenario as the customers of the 2G/3G HPMN cannot use the E-UTRAN deployed in the VPMN for Home-Routed applications. Home-Routing support would require an IWF between S8 and Gp but the feasibility of such IWF has not been studied by 3GPP.

However in the case where Home Network has not implemented LTE, and customers use local break-out in the VPMN **for all data services**, then the customers of the 2G/3G HPMN can use the E-UTRAN accesses deployed in the VPMN if the following conditions are met (3GPP TS 29.305 [24]):

- There is an explicit agreement with the HPMN to allow this roaming scenario.
- The HPMN is fully aware that none of the services requiring Home Routing will work.
- The VPMN (or the HPMN, or a third party) has deployed an IWF between S6a and Gr (a MAP-Diameter translator).

- The MME in VPMN can do the mapping of the subscription data for Gn/Gp SGSN provided by the HLR.
- The HLR has been upgraded with support for LTE security parameters (KASME) and supports Gr+ interface (Release 8 or latter shall be supported).

The architecture is shown in Figure 4.1.3-1 below:

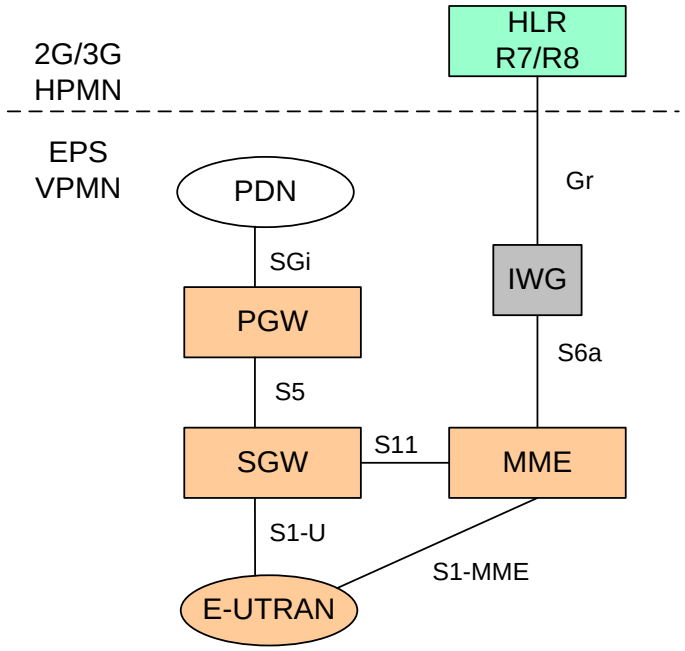

Figure 4.1.3-1: HPMN Legacy Roaming Architecture (local break-out)

4.2 Co-existence scenarios

4.2.1 Introduction

It is anticipated that both LTE roaming and 2G/3G roaming are provided at the same time between two PMNs, or, both or either PMNs may have deployed LTE but they only have 2G/3G roaming agreement.

This section describes roaming scenarios when LTE co-exists with 2G and 3G, and provides technical guidelines for operators to provide interconnectivity regardless of which kind of architecture the either side deploys.

The scenario to adopt must be agreed between two PMNs as part of their bilateral roaming agreement. The deployment of any other roaming scenarios is not recommended.

4.2.2 Possible scenarios

4.2.2.1 2G/3G Roaming Agreement Only

The following network configurations are allowed, if there is only 2G/3G roaming agreement between two PMNs. When two PMNs have only 2G/3G roaming agreement, only the use of Gp interface is allowed.

NOTE: For simplicity, HSS is omitted in the figures.

Scenario 1: Legacy GPRS Roaming

This scenario depicts a legacy GPRS roaming model which SGSN has Gp interface towards GGSN only. HPMN may also have PGW for internal use, but that is not used for roaming in this case.

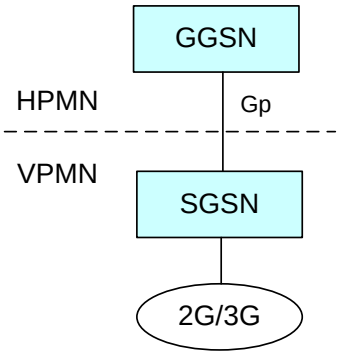

Figure 4.2.2.1-1: Scenario 1 - Legacy GPRS roaming

Scenario 2: HPMN only has PGW as the gateway for roaming

This scenario depicts a case where SGSN has Gp interface towards PGW only. HPMN may also have GGSN for internal use, but that is not used for roaming in this case.

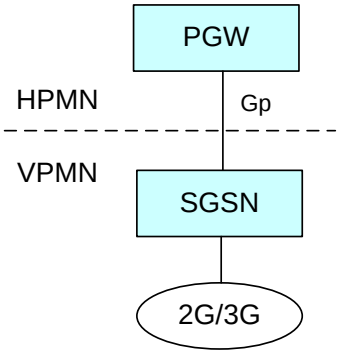

Figure 4.2.2.1-2: Scenario 2 - HPMN only has PGW as the gateway for roaming

Scenario 3: HPMN has both GGSN and PGW as the gateway for roaming

This scenario depicts a case where SGSN has Gp interface towards GGSN and PGW. The SGSN can select between using GGSN and PGW if the HPMN uses different APNs for GGSN compared to PGW. If the HPMN uses the same APNs on both GGSN and PGW, then VPMN SGSN must use UE-capability as follows: If UE is LTE capable, then PGW must be selected, and if the UE is only 2G/3G capable, GGSN must be selected.

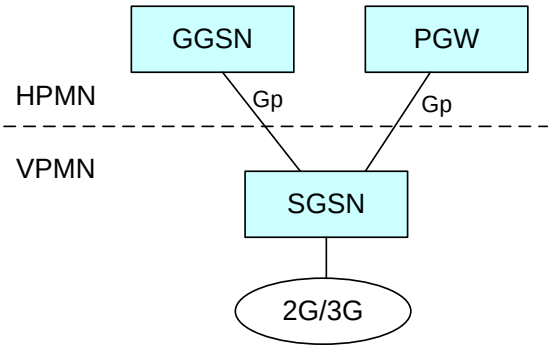

Figure 4.2.2.1-3: Scenario 3 - HPMN has both GGSN and PGW as the gateway for roaming

4.2.2.2 2G/3G and LTE Roaming Agreement

The following network configurations are permitted, if there is an LTE and 2G/3G roaming agreement between two PMNs. When two PMNs have an LTE and 2G/3G roaming agreement, an Inter-RAT handover must be made available. Also, 2G/3G access via both Gp and S8 interfaces towards PGWs in one PMN is prohibited that is a VPMN can only have either Gp or S8 towards PGWs in HPMN.

NOTE: For simplicity, HSS, PCRF, and MME are omitted in the figures.

DNS must consider both Rel-8 and preRel-8 query procedures defined in 3GPP TS 29.303 [8].

Scenario 1: HPMN only has PGW as the gateway for roaming, 2G/3G Access via Gp interface.

This scenario depicts a case where SGSN has a Gp interface towards PGW and SGW has an S8 interface towards the PGW. In this scenario, Inter-RAT handover is anchored at PGW. HPMN may also have GGSN for internal use, but that is not used for roaming in this case.

For scenario 1, the DNS must contain BOTH S-NAPTR (Rel-8) and A/AAAA (pre Rel-8) record for APNs which is registered at PGW.

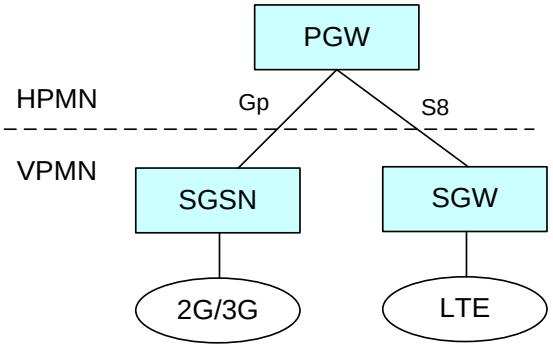

Figure 4.2.2.2-1: Scenario 1 - HPMN only has PGW as the gateway for roaming, 2G/3G Access via Gp interface

Scenario 2: The HPMN has both a GGSN and PGW as the gateway for roaming, 2G/3G Access are via a Gp interface.

This scenario depicts a case where a SGSN has a Gp interface towards a PGW and GGSN, and a SGW has a S8 interface towards PGW. In this scenario, 2G/3G data access will be provided over a Gp interface, and a Inter-RAT handover is anchored at PGW.

The SGSN can select between using a GGSN and PGW if the HPMN uses different APNs for GGSN compared to PGW. If the HPMN uses the same APNs on both GGSN and PGW, then the VPMN SGSN must use UE-capability as follows: If the UE is LTE capable, then PGW must be selected, and if the UE is only 2G/3G capable, GGSN must be selected.

For scenario 2, A DNS must contain BOTH S-NAPTR (Rel-8) and A/AAAA (pre Rel-8) record for APNs which is registered at both the GGSN and PGW.

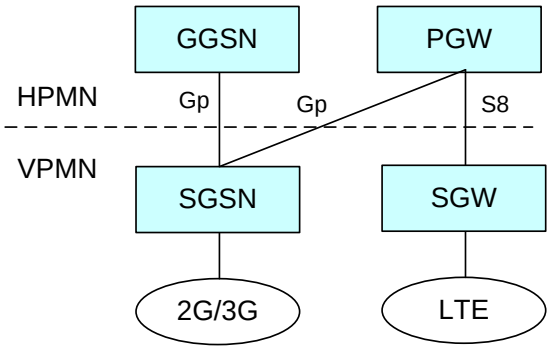

Figure 4.2.2.2-2: Scenario 2 - HPMN has both GGSN and PGW as the gateway for roaming, 2G/3G Access via Gp interface

Scenario 3: HPMN has only PGW as the gateway for roaming, 2G/3G Access via S4/S8 interfaces.

This scenario depicts a case where a SGSN has a S4 interface towards the SGW, and the SGW has a S8 interface towards the PGW. In this scenario, Inter-RAT handover is anchored at SGW, if the SGW doesn't change or PGW if SGW changes. HPMN may also have GGSN for internal use, but that is not used for roaming in this case.

For scenario 3, DNS must contain ONLY S-NAPTR (Rel-8) records for APNs which is registered at PGW.

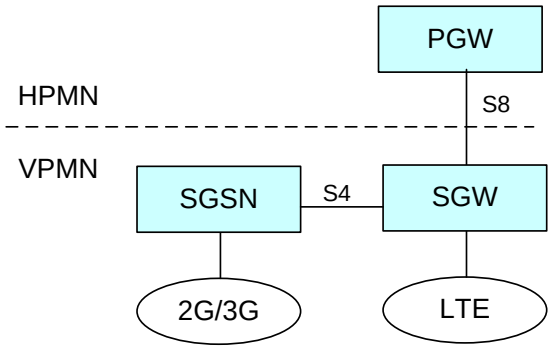

Figure 4.2.2.2-3: Scenario 3 - HPMN has only PGW as the gateway for roaming, 2G/3G Access via S8 interface

Scenario 4: HPMN has both PGW and GGSN as the gateway for roaming, 2G/3G Access via S4/S8 or Gp interfaces.

This scenario depicts a case where SGSN has a S4 interface towards the SGW and also Gp interface towards the GGSN, and SGW has a S8 interface towards the PGW. In this scenario, Inter-RAT handover is anchored at SGW if SGW doesn't change, or PGW if SGW changes.

The SGSN can select between using GGSN and SGW/PGW if the HPMN uses different APNs for GGSN compared to PGW. If the HPMN uses the same APNs on both the GGSN and PGW, then the VPMN SGSN must use UE-capability as follows: If the UE is LTE capable, then SGW/PGW must be selected, and if the UE is only 2G/3G capable, GGSN must be selected.

For scenario 4, DNS must contain BOTH S-NAPTR (Rel-8) and A/AAAA (pre Rel-8) records for APNs which is registered at BOTH GGSN and PGW

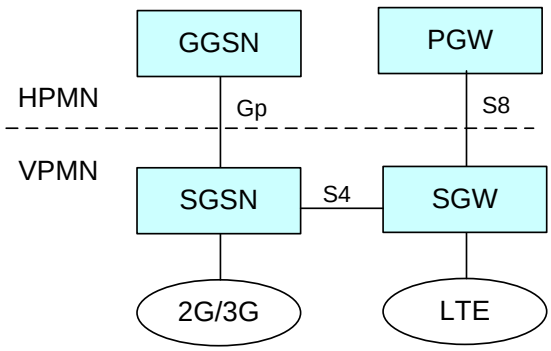

Figure 4.2.2.2-4: Scenario 4 - HPMN has both PGW and GGSN as the gateway for roaming, 2G/3G Access via S8 or Gp interface

In the following scenario. an operator supports Local Breakout (LBO) for roamers from its roaming partners, e.g., in case of VoLTE. It is a requirement in 3GPP TS 23.060 [29] that an S4-based SGSN must for all active PDN connections for a certain UE use either S4 or Gn/Gp. Thus a VPMN must assure that both home-routed PDN connections and LBO PDN connections are using either S4 or Gn/Gp, depending on if Gp or S8 is used towards a certain HPMN. See also Figure 4.2.2.2-5 and 4.2.2.2-6, respectively. For gateway interface and protocol configurations, see Annex A in 3GPP TS 23.060 [29].

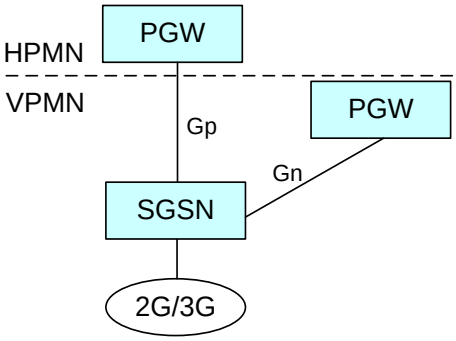

Figure 4.2.2.2-5: Scenario 5 – two PDN connections, one home-routed and one with LBO, and Gp is used towards HPMN

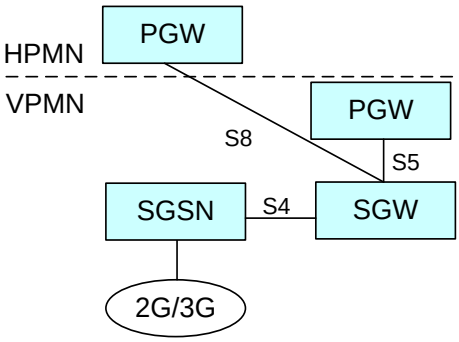

Figure 4.2.2.2-6: Scenario 6 – two PDN connections, one home-routed and one with LBO, and S8 is used towards HPMN

4.2.3 Consequences of different APN approaches when roaming

When implementing LTE/EPC, an operator needs to decide which services will be offered to its LTE customers and also which APNs will be provisioned for the corresponding services. Internet access and MMS are examples of legacy services that will also be offered to LTE customers as well as 2G/3G customers. For legacy services, the operator has the choice between provisioning the same APNs (single APN approach for a single service) for LTE customers as those provisioned for 2G/3G customers or provisioning new APNs (dual APN approach for a single service) for LTE customers compared to those provisioned for 2G/3G customers. Although both choices are legitimate, the implications for an operator and its customers need to be considered. These are discussed in the following sub-sections.

4.2.3.1 Consequences of the single APN approach when roaming

The single APN approach has implications to the selected gateway in the following scenario:

- The same APN is provisioned to both 2G/3G customers and LTE customer for the same service.
- The HPMN is in transition phase and has not yet decommissioned its GGSNs. The corresponding scenarios are scenario 3 of chapter 4.2.2.1 and scenarios 2 and 4 of chapter 4.2.2.2.
- The 2G/3G customers must be connected to a GGSN for any HPMN specific reason.
- The VPMN supports the Gateway selection procedure defined in TS 23.060 Annex A [29] including the UE-capability based gateway selection procedure (based on which

an SGSN can be configured to give priority towards SGW/PGW for LTE capable UEs as defined in TS 23.060, Section 5.3.7.1 [29]).

- Issue 1 occurs when the user swaps their 2G/3G provisioned (U)SIM into an LTE device (see below for more information).

The figure below illustrates issue 1. It corresponds to scenario 2 of chapter 4.2.2.2. The same issue occurs with the two other scenarios.

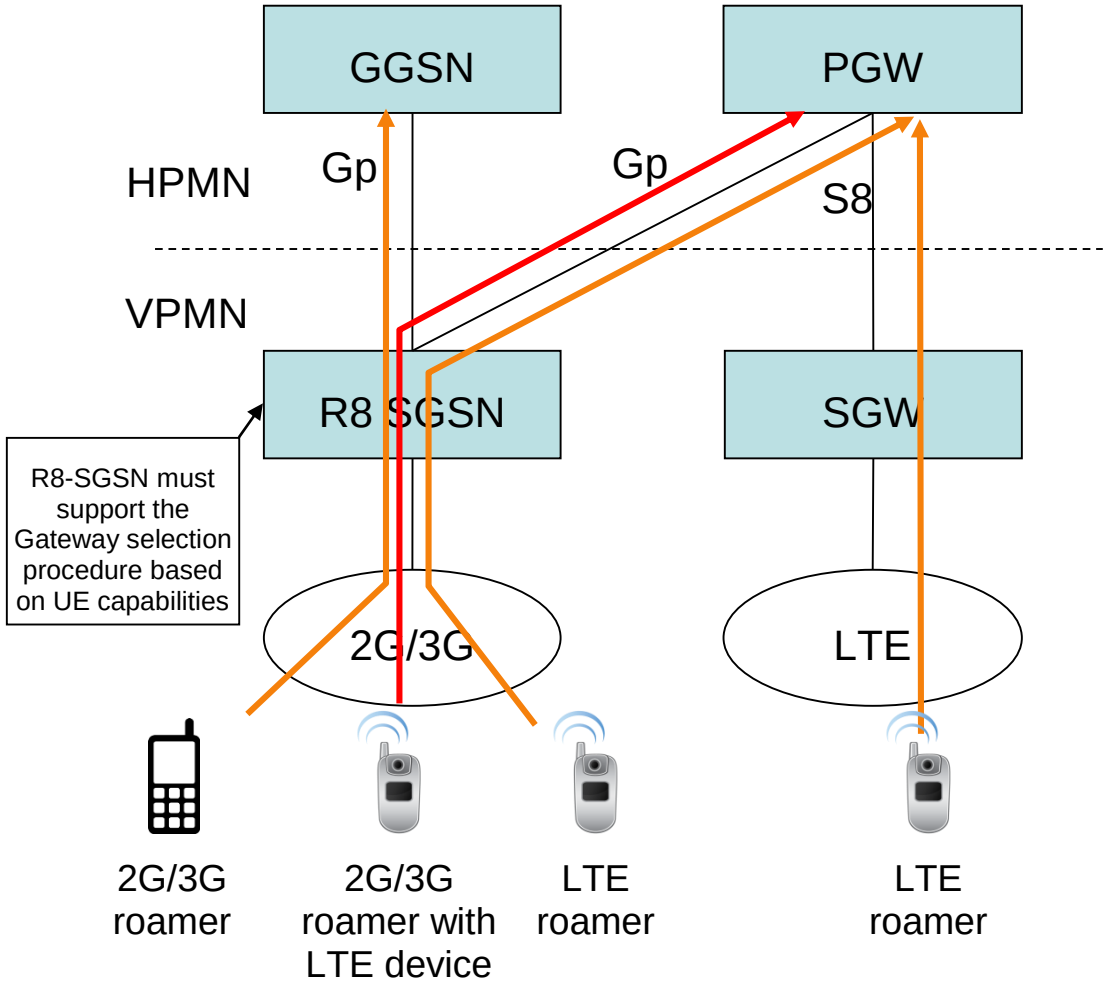

Figure 4.2.3-1: Gateway selection issue for a 2G/3G roamer with a LTE device

Due to the gateway selection procedure being based on both the APN and the UE capability, and not on any subscription information, the R8-SGSN will setup the IP connection of the 2G/3G roamer with the LTE device to the PGW and not to the GGSN as required by the HPMN.

NOTE: As soon as the HPMN decommissions its GGSNs, this issue disappears.

The single APN approach has also implications in this second scenario:

- The same APN is provisioned to both 2G/3G customers and LTE customer for the same service.
- The HPMN is in transition phase and has not yet decommissioned its GGSNs. The corresponding scenarios are scenario 3 of chapter 4.2.2.1 and scenarios 2 and 4 of chapter 4.2.2.2.
- The 2G/3G customers must be connected to a GGSN for any HPMN specific reason.
- The VPMN DOES NOT support the UE-capability based gateway selection procedure.
- Issue 2 occurs when the LTE roamer moves from the GERAN/UTRAN coverage to the LTE one.

In order to guarantee service continuity for subscribers moving between GERAN/UTRAN and LTE coverage it is required to anchor a packet session for LTE capable UEs at a PGW and not at a legacy GGSN.

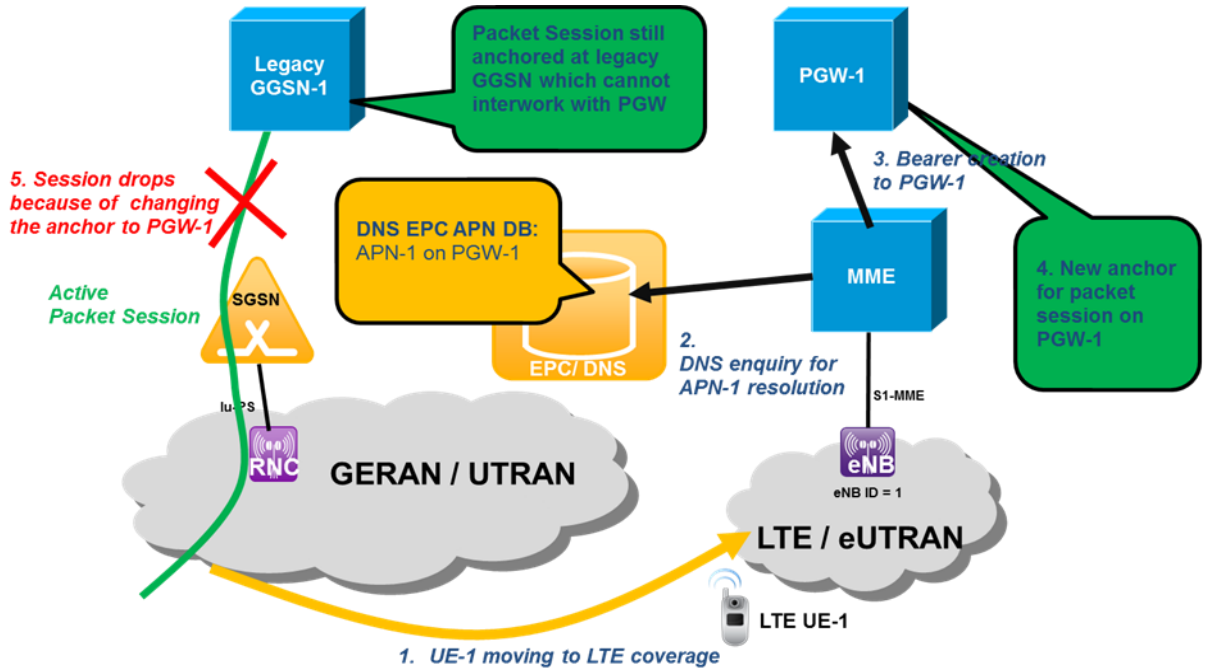

Figure 4.2.3-1: Service continuity issue for a LTE roamer

The PDP session setup under foreign GERAN/UTRAN will succeed if the SGSN does not support the UE-capability based gateway selection procedure. But if the subscriber is reaching LTE coverage in the VPLMN and the UE is initiating an inter RAT change from GERAN/UTRAN to LTE the packet session will drop because the anchor will change (see above figure).

NOTE: As soon as the VPMN upgrades its SGSNs to support the UE-capability based gateway selection procedure or the HPMN decommissions its GGSNs, this issue disappears.

4.2.3.2 Consequences of the dual APN approach when roaming

If an operator decides to use dual APNs for its customers (where legacy APNs are provisioned for 2G/3G customers only and different APNs are provisioned for LTE customers), the following must be noted:

- Different APNs are provisioned for different customers (2G/3G and LTE customers) for the same service therefore requiring additional testing.
- 2G/3G roamers with legacy devices will continue to be anchored on the GGSN based on DNS queries by the SGSN.
- LTE roamers will be anchored on the PGW.
- A 2G/3G roamer using an LTE device (SIM swap scenario) will be anchored on the GGSN.
- An LTE roamer camping on UTRAN/GERAN will be anchored on the PGW. This ensures session continuity when the LTE roamer moves to LTE coverage.

4.2.3.3 Guidance regarding the APN approach when roaming

Based on the considerations in sections 4.2.3.1 and 4.2.3.2, the HPMN operator should take into account when choosing the APN approach when roaming:

- If the HPMN has decommissioned its GGSNs, the single APN approach has no issues.
- If the HPMN is in transition phase and has not yet decommissioned its GGSNs, the dual APN approach has no issues.

Additionally, even if having a single EPS profile for both UTRAN and E-UTRAN access, GPRS and EPS profiles may have to co-exist and need to be coherent in terms of subscriptions.

As a consequence, and to guarantee session continuity and coherent QoS handling between 3G and LTE for dual APN approach, HPMN is recommended to deploy same couples of APN, PDN Type and, depending on local configuration, context-ID, on both Gr and S6a interfaces.

4.3 Inter-RAT Handover

4.3.1 Handover to/from 2G/3G and LTE

4.3.1.1 Introduction

Requirements on handover to/from 2G/3G and LTE are partly captured in Section 4.2. The following sections outline requirements for the Inter-RAT handover.

4.3.1.2 Handover restriction to/from 2G/3G and LTE (Active mode)

As illustrated in Figure 4.3.1-1, an LTE capable UE in 2G/3G access can be frequently handed over to LTE and any active data connectivity can be severely disrupted under the condition that a roaming agreement exists for 2G/3G but not for LTE between the PMNs.

A similar problem can happen also when:

1. A UE in LTE access is handed over to 2G/3G under the condition that a roaming agreement exists for LTE but not for 2G/3G between the pmns; or

2. The subscriber does not have the subscription to use the specific access type (for example, LTE), even when a roaming agreement exists for both LTE and 2G/3G between the pmns.

NOTE 1: Item 1 described above is considered a migratory problem while operators update their existing roaming agreements to encompass all the radio accesses.

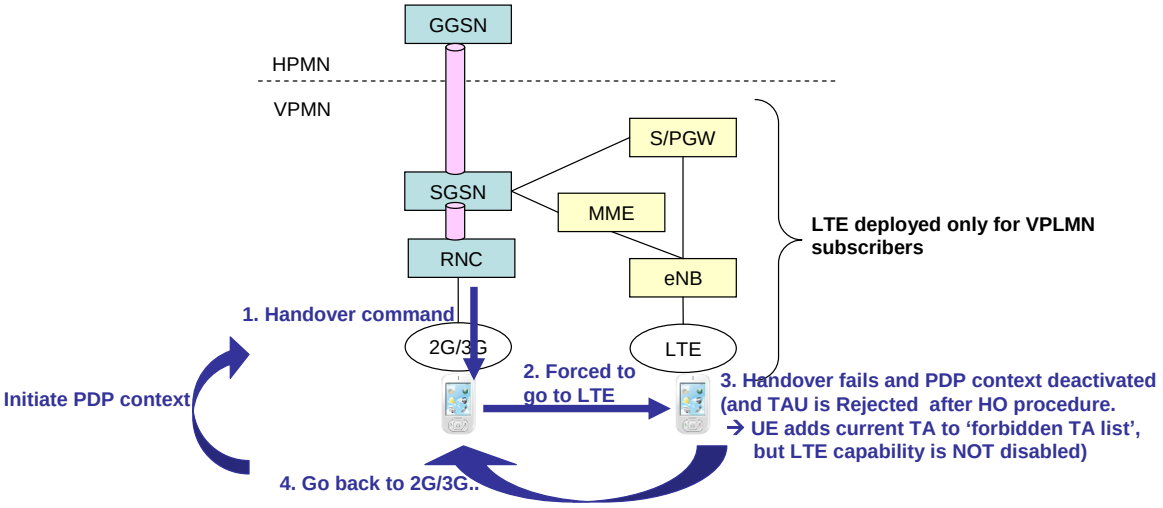

Figure 4.3.1-1: Possible service disruption scenarios

In order to avoid such service disruption for the inbound roamers, a PMN must utilise the functionality to restrict Inter-RAT handover as specified in 3GPP Rel-8 specifications as follows:

- For UTRAN and GERAN Iu-mode, if there is no LTE roaming agreement with the PMN of the inbound roamer, the SGSN and RNC must utilise "E-UTRAN Service Handover" IE to restrict handover to E-UTRAN, as specified in TS 23.060 [29] and TS 25.413 [43].
- For GERAN A/Gb-mode, if there is no LTE roaming agreement with the PMN of the inbound roamer, the SGSN and BSS must utilise "Service UTRAN CCO" IE to restrict handover to E-UTRAN, as specified in TS 23.060 [29] and TS 48.018 [44].
- For E-UTRAN, if there is no 2G/3G roaming agreement with the PMN of the inbound roamer, the MME and eNB must utilise "Handover Restriction List" IE to restrict handover to UTRAN/GERAN, as specified in TS 23.401 [1] and TS 36.413 [45].

The MME and SGSN are responsible for managing the list of roaming agreements. SGSN must be capable of handling “Access Restriction Data” IE as specified in TS 29.002 [46] and “Access-Restriction-Data” AVP as specified in TS 29.272 [8], and MME must be capable of handling ““Access-Restriction-Data” AVP as specified in TS 29.272 [8], so that they can appropriately set the IEs listed in section 4.3.1 when HLR/HSS indicates that there’s no necessary subscription to use the target access network.

The use of "Pre-redirect" feature (which is also known as “RRC reject with redirection”) must not be used unless implementation-specific mechanisms are in place to ensure that the UE is accepted by the target access network’s core network.

To allow VPMN to apply above functionalities, it is recommended that a HPMN includes appropriate access restriction data in the subscriber profile if the user does not have a subscription to use specific access technology, as specified in TS23.401 [1], TS 23.060 [29], and TS 23.221 [39].

4.3.1.3 Handover restriction to/from 2G/3G and LTE (Idle mode)

If a roaming agreement exists for 2G/3G but not for LTE between the PMNs, then the following problematic scenario may exist:

- UE with LTE capability in idle-mode camping on 2G/3G reselects E-UTRAN.
- The UE sends a TAU Request message through eNodeB to MME.
- The MME finds that the authentication procedure fails and returns a TAU Reject message with the cause value #15.
- The UE adds the TA to the forbidden TA list and switches to 2G/3G.
- The steps (1) and (2) occur.
- The UE reads broadcasted system information, finds that the TA is in the forbidden TA list, and switches back to 2G/3G.
- The procedure repeats itself when the TA is removed from the forbidden TA list after implementation specific value between 12h - 24h (as specified in TS24.301 [32]).

The above problematic scenario causes unnecessary signalling traffic for RNC, SGSN, eNodeB, MME, and S-GW of VPMN.

A similar problem can happen also when a UE in idle-mode on LTE access moves to 2G/3G under the condition that a roaming agreement exists for LTE but not for 2G/3G between the PMNs.

The MME and SGSN are responsible for managing the list of roaming agreements. The MME and SGSN must provide “Radio Access Technology / Frequency Selection Priority (RFSP) index” to eNB/RNC as specified in TS23.401 [1] and TS23.060 [29]. Based on the RFSP index provided, the RNC provides camping policy to the UE to not camp on either LTE/2G/3G using RRC signalling. The UE then does not camp on the radio access which the UE does not have subscription to access.

To allow VPMN to apply above functionalities, it is recommended that a HPMN includes appropriate access restriction data in the subscriber profile if the user does not have a subscription to use specific access technology, as specified in TS23.401 [1], TS 23.060 [29], and TS 23.221 [39].

4.3.2 Handover to/from non-3GPP accesses and LTE

Roaming from/to non-3GPP access is not supported in this version of the document. Accordingly, the handover to/from non-3GPP accesses and LTE is not supported in this version of the document.

4.3.3 Bandwidth considerations

4.3.3.1 Issue description and possible cause

When a UE moves from a RAT with lower bandwidth such as 2G/3G to LTE, there is sometimes the case that the UE continues to have a similar bandwidth as in 2G/3G instead of getting a higher bandwidth in LTE.

One cause might be that the HLR is provisioned with a lower bandwidth than the HSS for the same APN, in case the operator has two separate nodes for HLR and HSS.

The basic assumption in the 3GPP specs is that the subscription data is the same irrespective of RAT, so that subscription data in SGSN for 2G as well as 3G is equal to subscription data for LTE in MME.

Note that at Inter-RAT Handover the MME will receive new subscription data from HSS at the end of the procedure, and it can be one option that the MME performs HSS Initiated Subscribed QoS Modification due to the bandwidth change at the end of the Inter-RAT Handover. This will however cause additional signalling all through the network.

4.3.3.2 Possible solutions

The issue described above can be solved by any of the following solutions:

- Subscriber Data: Assure that the bandwidth sent to SGSN from HSS/HLR is high enough to assure a satisfactory bandwidth on LTE.
- PCRF QoS modification at RAT change: Involve the PCRF in QoS modification at RAT change as specified in sections 5.4.3 of 3GPP TS 23.401 [1]. This requires the PDN GW to have a trigger to contact PCRF at RAT change.
- PGW QoS modification at RAT change: If PCRF is not deployed in the operator's network, the PGW can initiate QoS modification based on RAT change.

5 Technical Requirements and Recommendations for Services

5.1 Short Message Service (SMS)

5.1.1 SMS over SGs

SMS over SGs is a means to provide C-Plane based SMS over LTE access without forcing UE to fall back to overlay 2G/3G accesses. SMS over SGs is defined in 3GPP TS 23.272 [25].

If a VPMN operates a network comprising LTE plus GSM and/or UMTS access(es) and if this VPMN provides a non-IMS SMS service as well as an LTE data service to visiting subscribers, then it must support SMS over SGs.

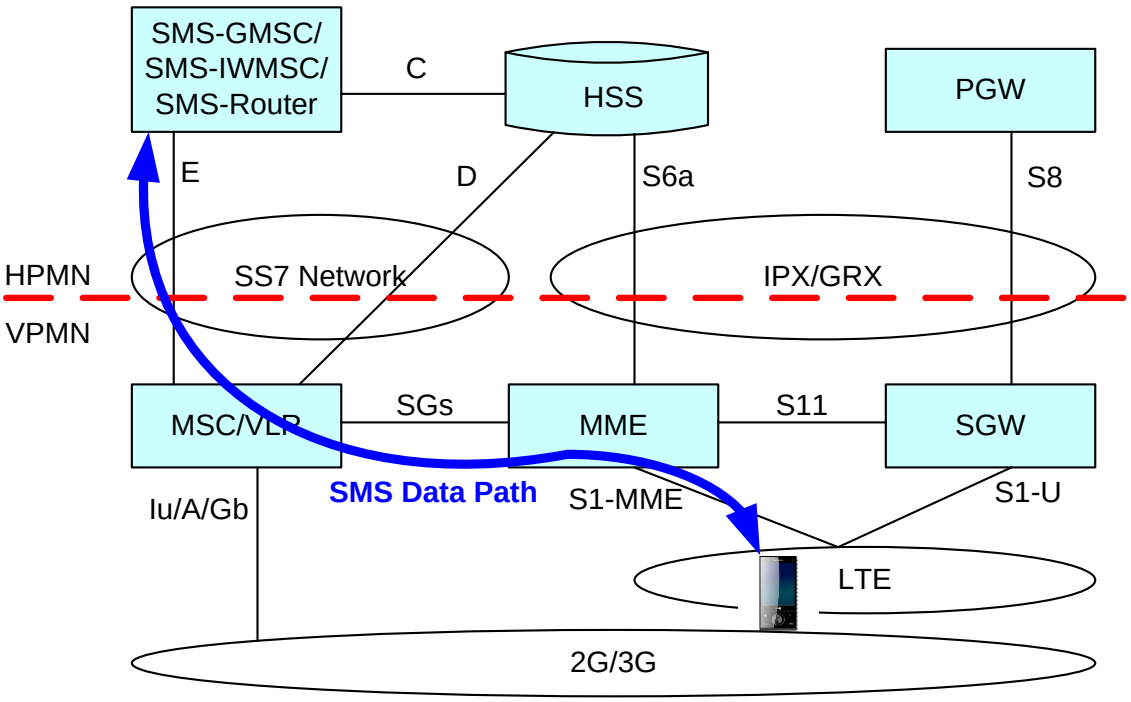

Figure 5.1.1-1: SMS over SGs Roaming Architecture

When SMS over SGs is provided for roaming, existing roaming interfaces for SMS services (E interface) will be used without any changes. Therefore, there are no new guidelines required for SMS over SGs.

5.2 Voice

5.2.1 CS Fallback

5.2.1.1 General

In some initial deployments, there will be no support of voice services on LTE. However, operators still want users on LTE to access the voice calls. This can be achieved by providing CSFB procedures. CSFB is defined in 3GPP TS 23.272 [25], in 3GPP TS 23.018 [27], and is introduced as an *interim* solution before VoLTE is deployed. Release 10 compliant CSFB implementation is recommended for voice fallback as some of the Release 8 implementations are not deemed to be efficient enough.

If a VPMN operates a network comprising LTE plus GSM and/or UMTS access(es) and if this VPMN provides a non-IMS voice service as well as an LTE data service to visiting subscribers, then it must support CSFB for voice.

During the CSFB procedure, UE camping in LTE will be handed over to overlay 2G/3G access right after the call request is made. CSFB can be used for voice, Location Services (LCS) and call-independent supplementary services such as USSD.

NOTE: Supporting (MAP) PSI (Provide Subscriber Info) in the MSC(-Server) and HLR according to 3GPP TS 23.018 [7] and 3GPP TS 29.002 [18] avoids unnecessary fallbacks to 2G/3G CS due to PSI, that can affect on-going PS sessions of the end user (e.g. suspended

sessions if the UE fallbacks to 2G CS) and generate extra Update Locations when the UE switches between 2G/3G and LTE RATs.

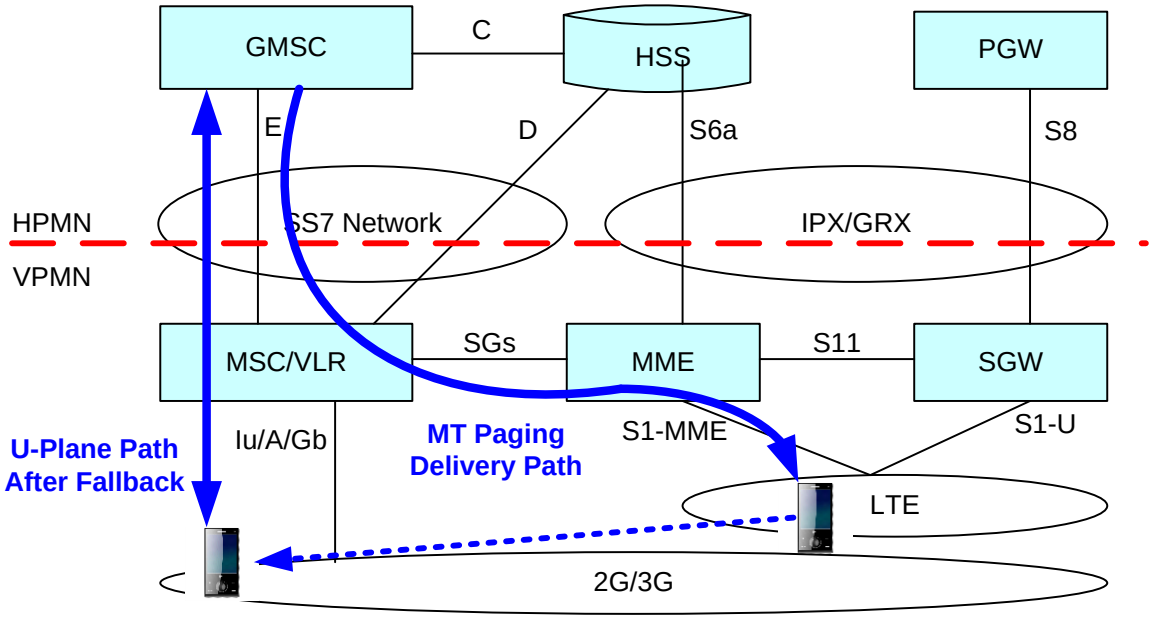

Figure 5.2.1.1-1: CSFB Roaming Architecture

When CSFB is provided for roaming, either the Roaming Retry procedure or the Roaming Forwarding one can be implemented in the VPMN and the HPMN; it may impact the roaming interfaces (see next sections for the procedures description).

It is highly recommended to implement one or the other procedure since it increases the Mobile Terminating Call (MTC) success rate. If the Roaming Retry procedure or the Roaming Forwarding one is not implemented then the existing roaming interfaces for circuit switched services will remain unchanged.

5.2.1.2 Roaming Retry for CSFB procedure

The Roaming Retry procedure for CSFB is specified in 3GPP TS 23.272 [25].

Both VPMN and HPMN can implement the Roaming Retry procedure to avoid MTC failures as explained below. In particular, HLR/HSS, Gateway MSC (GMSC) and Visited MSC (VMSC) shall support the procedure as specified in 3GPP TS 23.272 [25].

The Roaming Retry procedure impacts on the roaming interfaces are listed below.

D interface modification:

The HLR/HSS must send the MT Roaming Retry Information Element in the MAP Provide Roaming Number message.

E Interface implementation:

The E interface between the VPMN and HPMN must be implemented. The GMSC and VMSC must support the Resume Call Handling MAP procedure.

The entire concept of CSFB relies on a careful and combined radio engineering of the Location Areas and Tracking Areas at the MSC (pool) area boundaries. More precisely, the Tracking Areas (TA) Lists at MSC pool area boundaries must be configured such that they do not extend beyond the coverage of the corresponding Location Areas (LA).

The following figure illustrates a LA-TA misalignment on the MSC coverage boundaries.

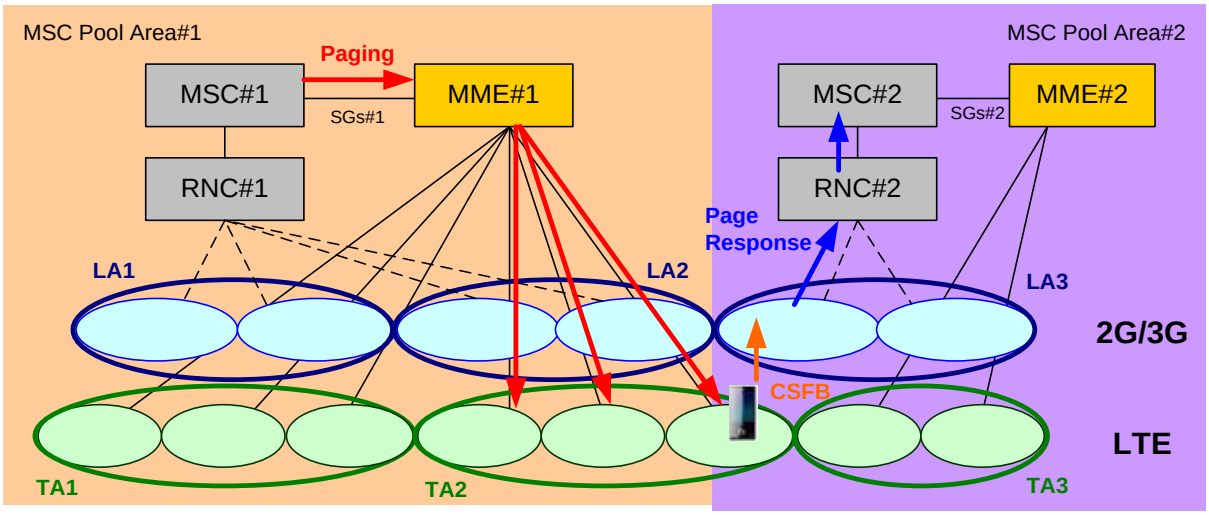

Figure 5.2.1.2-1: CSFB issue due to TA/LA misalignment

When the TA List coverage extends beyond the LA one then there will be some cases where the UE will actually fall-back on a 2G/3G cell belonging to another MSC than the one where it registered during the combined EPS/IMSI Attach or the combined Tracking Area Update/Location Area Update. For instance, Figure 5.2.1.2-1 depicts the case where the UE which is registered under TA2/LA2 of MSC1 receives a paging for an MTC. Depending on the geographical position of the UE when it falls back to 2G/3G, it may select a cell in LA3 of MSC2. In such situation, the UE will send the paging response to MSC2, which is not aware of the call establishment and does not have the subscriber's profile. So without Roaming Retry procedure, such MTC would fail.

Roaming Retry allows releasing the call leg established between the HPMN GMSC and MSC1 and re-establishing it from GMSC to MSC2, so that MSC2 will understand the paging response and will be able to setup the call. The call setup time will increase (compared to the case where the UE is under the coverage of the MSC it is registered in), but the call will be successful.

It is not realistic that LTE and 2G/3G radio coverage could perfectly match. Note that the issue occurs only at MSC boundaries so MSC pools decrease the number of the occurrence of such issue as there are fewer boundaries, but it does not fix it completely unless there is only one pool in the whole VPMN. 3GPP also defined a method to help operators keep LAs and TAs in alignment. This is described in TS 32.425 [28] from Rel-9 and onward. This method facilitates the configuration of TA boundaries with LA boundaries by gathering statistics in E-UTRAN (from the inbound inter-RAT mobility events of all UEs) of the most common LAs indicated in the Radio Resource Connection signalling.

5.2.1.3 Roaming Forwarding for CSFB procedure

The Roaming Forwarding procedure for CS Fallback is specified in chapter 7.5a of 3GPP TS 23.272 [25]. This is an alternative solution to Roaming Retry to the problem of TA/LA misalignment that may cause Mobile Terminating Calls fail.

Roaming Forwarding allows forwarding the incoming call from MSC1 to MSC2 so that the Mobile Terminating Call (MTC) setup is successful.

The impacts on the VPMN and HPMN depend on whether the roamer's UE is paged with a Temporary Mobile Subscriber Identity (TMSI) and whether the VPLMN has implemented the MAP Send Identification or not.

If the roamer's UE is paged with a valid TMSI when performing the MTC CSFB then the impact is limited to the VPMN. The VMSC must support the procedure using MAP Send Identification as specified in 3GPP TS 23.272 [25] in chapter 7.5a. There is no impact on the roaming interface.

In order to avoid paging the roamer's UE with IMSI when performing the MTC CSFB, the VPMN can implement the procedures for handling of CS services in specific cases as specified in 3GPP TS 23.272 [25] in chapter 4.8. This ensures that the UE and the network have a valid TMSI when paging the UE.

In some implementation cases, the VPMN does not allocate TMSI at all. Then roamer's UE is always paged with IMSI when performing the MTC CSFB. Support of the Roaming Forwarding procedure as specified in 3GPP TS 23.272 [25] in chapter 7.5a in both the HPMN and the VPMN is required to ensure call termination. The Roaming Forwarding procedure impacts on the roaming D interface are listed below:

- The new MSC/VLR includes the "MTRF Supported flag" in the MAP Update Location message sent to the HLR.
- The HLR includes the "MTRF Supported And Authorized" flag, the "new MSC number" and "new VLR number" in the MAP Cancel Location message sent to the old VLR.

5.2.1.3 Coexistence of Roaming Forwarding and Roaming Retry procedures

The procedures can coexist in the VPMN. The choice is at the initiative of the VPMN.

5.2.1.4 Recommended procedures

Whenever it is possible, it is strongly recommended to implement the Roaming Forwarding procedure using TMSI in paging for the following reasons.

the Roaming Forwarding procedure has a lower call setup time than Roaming Retry

if the roamer is paged with TMSI then there is no impact on the roaming interface at all

It is also recommended to implement the procedures for handling of CS services in specific cases as specified in 3GPP TS 23.272 [25] in chapter 4.8 to make sure that the UE is always paged with a valid TMSI.

5.2.2 LTE Voice Roaming Architecture

To support LTE Voice roaming (as defined in IR.65), both the PGW and the Proxy-Call Session Control Function (P-CSCF) are located in the VPMN. To select the correct PGW in the VPMN, the HPMN operator has to allow its LTE Voice subscribers to use VPMN addressing. See Section 6.3.3 for detailed discussion related to gateway selection and a "well-known" Access Point Name usage related to LTE Voice Roaming.

The architecture also assumes that the Policy and Charging Control (PCC) framework is deployed as an integral part of the IMS services in general.

NOTE: For LTE voice roaming, the PCRF in the visited network may be configured with static policy rules for roaming subscribers, in order to configure the default and dedicated bearers as specified in IR.92 [30] and IR.94 [55]. As an alternative, and dependent on operator agreements, dynamic PCC may be used to exchange policy information between the hPCRF and the vPCRF (that is S9 interface).

Terminating Access Domain Selection (T-ADS) optimizes routing of MT calls so that they can be successfully delivered to the UE irrespective of whether or not the UE is camping in an area with IMS Voice over PS supported. If an HPMN requires T-ADS for its outbound roaming subscribers, then both the HPMN and VPMN must provide the needed functionality as described in GSMA PRD IR.64 [52].

5.2.3 HSPA Voice Roaming Architecture

HSPA Voice Roaming for the case of SGSN connected to a PGW, the same architecture as described in clause 5.3.2 applies. For HSPA Voice Roaming for the case of Gn/Gp SGSN connected to a GGSN, see IR.33.

6 Other Technical Requirements and Recommendations

6.1 Access Control

6.1.1 Access Control in the VPMN

Without an explicit agreement from the HPMN, the VPMN must block the access of inbound roamers into their LTE access network. This is compulsory to ensure roamers will not experience any service disruption because the necessary technical requirements have not been implemented and tested with the HPMN.

The VPMN shall implement the same access control feature that exists today in MSC and SGSN. One mechanism to achieve this is based on the IMSI range. In this mechanism, the subscriber is either rejected (with the appropriate reject cause as defined in 3GPP TS 24.301 [32]) or allowed to "attach" and perform the subsequent Tracking Area Update procedures.

If the procedure is to be rejected, then the appropriate error cause is:

- Cause #15 (no suitable cells in Tracking Area) if the VPMN already has a Roaming Agreement with the HPMN covering other Radio Access Technologies (RATs). It forces the UE to reselect another RAT in the same PMN.

- Cause #11 (PLMN Not Allowed) if the VPMN has no roaming agreement with the HPMN. It forces the UE to perform a PMN reselection. UE shall store the PMN identity in the "forbidden PLMN list" in the USIM and the UE shall no more attempt to select this PMN. Cause #13 may also be used (to avoid permanent storage of PMN in the Forbidden PMN file in the USIM).

6.1.2 Access Control in the HPMN

If the VPMN does not implement the requirements in the previous section, then the HPMN can implement its own access control feature in the HSS to protect its subscribers.

If the HPMN already has a Roaming Agreement with the VPMN covering other Radio Accesses then the reject indication sent by the HSS back to the MME in the Update Location Answer must be mapped into cause #15 (no suitable cells in Tracking Area).

- It is recommended to use the reject indication DIAMETER_ERROR_UNKNOWN_EPS_SUBSCRIPTION (5420) without Error Diagnostic, or with Error Diagnostic of GPRS_DATA_SUBSCRIBED as it must be mapped into cause#15 according to Table A.1 of TS29.272.
- As an alternative, the DIAMETER_ERROR_RAT_NOT_ALLOWED (5421) reject indication can be used instead but the MME must map it into cause#15 instead of cause #12 or cause#13.

If the HPMN has no Roaming Agreement with the VPMN then the HSS can send back Update Location Answer with reject indication set to DIAMETER_ERROR_ROAMING_NOT_ALLOWED (5004) without Error Diagnostic back to the MME. This reject indication must be mapped to cause #11 (PLMN Not Allowed).

6.1.3 Access Control in the VPMN for CS Fallback

If the VPMN does not implement CS Fallback feature and the VPMN has Roaming Agreement with the HPMN covering LTE, the VPMN must inform the UE that the VPMN does not support CS Fallback feature. This is compulsory to ensure roamers will be able to reselect the RAT which supports the voice according to CS Fallback capable UE's settings.

The mechanism to achieve this is that if UE performs Combined Attach or Combined Tracking Area Update procedure, MME shall accept this as "EPS only" with cause #18 (CS domain not available), see also clause 5.5.1.3.4.3 in 3GPP TS 24.301 [32]. If voice preferred UE receives cause #18, UE will select 2G or 3G, and if data preferred UE receives cause #18, UE will stay in LTE, following the rules as defined in 3GPP TS 23.221 [39] and 24.301[32].

If the VPMN only has a roaming agreement for E-UTRAN with the HPMN of the UE, upon receiving an SGs AP-LOCATION-UPDATE-REJECT message with either MM cause #11 or MM cause #13, then the MME should map the MM cause to EMM cause #18, as specified in Release 12 3GPP TS 29.118 [x]. This allows Data Centric UEs to stay in the same PMN, and Voice Centric UEs to select different PMN.

6.2 Addressing

6.2.1 UE Addressing

6.2.1.1 SS7

An LTE capable UE may be assigned an MSISDN (optional because it is an optional element on the S6a interface). However, it must be assigned an MSISDN by the HPMN in any of the following conditions:

- The UE is 2G CS capable, 3G CS capable or both (The word 'capable' means that the UE is capable to establish/receive CS calls).
- The UE is capable of SMS.

6.2.1.2 IP

Every LTE capable UE is allocated (either statically or dynamically) one or more IP addresses (at least one per PDN Connection). The requirements in GSMA PRD IR.40 [12] must be adhered to for IP addresses used.

For the type of IP address allocated (that is public or private) and the method by which an address is assigned (that is statically or dynamically), the requirements and recommendations in GSMA PRD IR.33 [10] Section 3.1.4.1 apply with the following exceptions:

- Where "PDP Context" is used, this should be interpreted as "PDN connection".
- Where "GGSN" is used, this should be interpreted as "P-GW".
- Where "SGSN" is used, this should be interpreted as "MME".

The version of IP address(es) allocated (that is IPv4 or IPv6) depends on the PDN Types requested by the UE and supported in the core network. The requirements and recommendations in GSMA PRD IR.33 [10] Section 3.1.5 apply with the following exceptions:

- Where "PDP Context" is used, this should be interpreted as "PDN connection".
- Where "PDP Type" is used, this should be interpreted as "PDN Type".
- Where "GGSN" is used, this should be interpreted as "P-GW".
- Where "SGSN" is used, this should be interpreted as "MME and SGW".

NOTE 1: The MME and SGW are assumed to always support the same PDN Types, since they are always in the same network that is the VPMN.

NOTE 2: Unlike the Gn/Gp SGSN, the MME/SGW and S4-SGSN must support the PDN/PDP Type of IPv4v6. The PDN/PDP Type of IPv4v6 is specified in 3GPP TS 23.401 [1].

In addition to the above, for PMNs that have UMTS and/or GSM and deploy their LTE/EPC with IPv6 support must also support handover of IPv6 bearers to UMTS/GSM.

6.2.2 Network Element Addressing

6.2.2.1 IP and SS7

EPC is designed to be an "all IP" architecture. Thus, all EPC network elements require an IP address. The requirements in GSMA PRD IR.34 [11], GSMA PRD IR.33 [10] and GSMA PRD IR.40 [12] shall apply for the routing and addressing used for the S6a, S6d, S8 and S9 interfaces. Internal addressing and routing is a decision for the Service Provider.

Some network elements also support SS7 too for legacy interworking, for example S4-SGSN. Thus, such nodes will continue to require an SS7 Global Title.

6.2.2.2 Fully Qualified Domain Names (FQDNs)

All EPC network elements that have an IP address, in the most part are assigned one or more FQDNs (the number is generally based on the number of interfaces). The following FQDNs as defined in 3GPP TS 23.003 [7] are mandatory in order to enable discovery by another node, and should be provisioned on the PMN's DNS Server which is used by roaming partners:

- APN-FQDN
  - format is: <APN NI>.apn.epc.mnc<MNC>.mcc<MCC>.3gppnetwork.org
- TAI-FQDN
  - format is: tac-lb<TAC-low-byte>.tac-hb<TAC-high-byte>.tac.epc.mnc<MNC> .mcc<MCC>.3gppnetwork.org

Recommendations on FQDNs for EPC/LTE network elements can be found in GSMA PRD IR.67 [21] and 3GPP TS 23.003 [7].

6.2.2.3 Diameter Realms

All EPC nodes that have an interface that use a Diameter based protocol need to have a Diameter realm associated with them. Diameter realms have the appearance of a domain name or FQDN, in that they consist of labels separated by dots. However, in essence they are another form of addressing. Diameter realms can be resolved using DNS, but this is optional (see Section 3.1.3 for more information on when Diameter realms in EPC need to be provisioned in DNS).

Recommendations on Diameter realms for EPC network elements that have an interface that utilise a Diameter based protocol can be found in GSMA PRD IR.67 [21] and 3GPP TS 23.003 [7].

6.3 APN for IMS based services

6.3.1 Introduction

IMS well-known Access Point Name (APN) and an APN for related Home Operator Services are defined below. For more details on when these APNs are used, see GSMA PRD IR.65 [31] (for the general case), GSMA PRD IR.92 [30] (for Voice and SMS over LTE), IR.58 [48] (for Voice over HSPA), IR.94 [55] (for video over LTE and HSPA) and GSMA PRD RCC.07 [47] (for Rich Communication Suite).

NOTE:The APN for Home Operator Services was formerly known as the "APN for XCAP/Ut". Its name was changed after further IMS-based services beyond Supplementary Services configuration via IMS were identified in GSMA PRD RCC.07 [47] as needing to utilise a PDN located in the HPMN e.g. for XCAP, IMAP and HTTP.

For cases when the IMS well-known APN is kept if the UE moves into 2G/3G coverage, or when it is activated while the UE is in 2G/3G coverage, the Signalling Indication attribute (see also 3GPP TS 23.107 [51]) needs to be set in the QoS profile in the HLR / HSS.

In a transition phase, IMS well-known APN might be used where only a data Roaming agreement is in place to handle other services (e.g. RCS) that are not covered by enforcing Roaming agreements. In that case, the traffic towards the APN shall be home-routed and bearer establishment procedures, including QoS handling, shall follow the same process as any other APN with home-routed traffic according to the data Roaming agreement as defined in section 3.2 and as well as to the QoS limits as defined in section 6A.1.1 and 7.1.2 of this document.

6.3.2 IMS well-known APN

6.3.2.1 Definition

The Network Identifier (NI) part of the APN must be set to "IMS". The APN Operator Identifier (OI) part of the full APN must be blank as it is automatically derived and appended to the NI part by the VPMN and its value depends on the PMN whose PGW the UE is anchored to i.e. VPMN when roaming and HPMN when not roaming.

For IMS emergency calls/sessions, see Section 6.4.

6.3.2.2 Gateway Selection

The IMS well-known APN utilises a PGW in the VPMN when roaming. Therefore, when enabling IMS roaming for a subscriber, the following subscription settings must be taken into account for the IMS well-known APN:

- The bar on "All Packet Oriented Services" is not active
- The bar on "Packet Oriented Services from access points that are within the roamed to VPMN" is not active
- The "VPLMN Address Allowed" parameter in the HSS is set on a per VPMN basis. The HPMN must set the "VPLMN Address Allowed" parameter for the IMS "well known" APN only if a roaming agreement for IMS voice is in place between the HPMN and that VPMN and the user is subscribed to an IMS service that requires it. The VPMN must allow for the "VPLMN Address Allowed" setting for the IMS "well known" APN in the VPMN.

NOTE: The term ‘access point’ is used to indicate the PGW or part of the PGW that is specified by a particular APN.

If the IMS well-known APN is set to the default APN, then the gateway selection logic follows the "Default APN was selected" procedures described in Annex A.2 of 3GPP TS 23.060 [29]. If IMS services are revoked for a subscriber whose Default APN is the IMS well-known APN, then the Default APN needs to be set to a different APN or else, the subscription barred

completely. This is to prevent a complete denial of service to the subscriber and unnecessary traffic on the RAN and CN.

If the UE provides the IMS well-known APN (because it is not the default APN), then the gateway selection logic follows the “An APN was sent by the MS” procedures described in Annex A.2 of 3GPP TS 23.060 [29]. The UE does not provide the APN Operator Identifier so that the expected gateway selection logic will be the same as in the case where the network provided the IMS well-known APN as the Default APN.

6.3.2.3 Inter-PLMN roaming hand over

If the PDN connection to the IMS well-known APN is maintained after moving from one PLMN to another, because an inter-PLMN roaming agreement is in place, then the PGW must disconnect the PDN connection to the IMS well-known APN unless the inter-PLMN roaming agreement in place allows this PDN connection to continue.

NOTE 1: This ensures that the PLMN where the UE has moved to provide the local PGW and the PDN connection to the IMS well-known APN, see also GSMA PRD IR.65 [31].

NOTE 2: The behaviour recommended in the present section may not apply in the case of national roaming; that case is FFS.

6.3.2.4 Network-initiated deactivation and re-activation of the PDN connection to the IMS well known APN

For network-initiated deactivation with reactivation of the PDN connection to the IMS well known APN, the network must support the procedures as specified in 3GPP TS 23.401 [1] sub clauses 5.4.4.1 and 5.10.3.

NOTE 1: Care needs to be taken when the MME needs to restore the PDN connection for many UEs to avoid signalling overload (for example in the case of node restart as specified in 3GPP TS 23.007 [41])

NOTE 2: Reactivation requested by the network when deactivating a PDN connection does not work with pre-Release 9 LTE UEs, but according to GSMA PRD IR.92 [30] sub clause 2.4.2.1, a UE must always re-establish the PDN connection to the IMS “well known” APN if the PDN connectivity is lost.

6.3.3 APN for Home Operator Services

6.3.3.1 Definition

The Network Identifier (NI) part of the APN is undefined and must be set by the Home Operator. The requirements for the value of the APN NI are as follows:

- must be compliant to 3GPP TS 23.003 [7] section 9.1.2;
- must resolve to a PGW in the HPMN; and
- must not use the same value as the IMS well-known APN (as defined in Section 6.3.2.1).

Home operators can choose to reuse an APN for already deployed services (e.g. Internet access, WAP, MMS, etc.) or choose a new, specific APN for the APN for Home Operator Services. A comparison of both approaches is given in the table below:

Reusing an existing APN	Using a new/specific APN
Limits the number of PDN Connections required by a UE at any one time	May increase the number of PDN Connections required by a UE at any one time.
Separate charging, QoS and routing to other services (e.g. Internet access, WAP, MMS, etc.) may be more difficult or even cannot be applied on a per APN basis.	Separate charging, QoS and routing to other services (e.g. Internet access, WAP, MMS, etc.) may be easier to apply on a per APN basis.
Depending on UE implementation, Home Operator Services may be negatively affected if the user changes the APN value to receive another service that uses the same APN in a different way e.g. user changes the value to "euinternet" to receive Internet access from an LBO Provider when roaming (see IR.33 [10] for more information on LBO Providers).	Ensures UE implementations provide separate routing for Home Operator Services compared to others, and thus changes to APNs for other services will not affect the routing or availability of Home Operator Services.

Table 6.3.3.1-1: Relevant interfaces for LTE and EPC roaming

If using a new/specific APN, then the value "hos" (case insensitive) is recommended.

The APN Operator Identifier part of the full APN should be blank as it is automatically derived and appended to the NI part by the VPMN.

6.3.3.2 Gateway Selection

The APN for Home Operator Services utilises a PGW always in the HPMN. Therefore, when enabling IMS roaming for a subscriber, the following subscription settings must be taken into account for the APN for Home Operator Services:

- The bar on "All Packet Oriented Services" is not active
- The "VPLMN Address Allowed" parameter in the HSS is unset.

NOTE: The term ‘access point’ is used to indicate the PGW or part of the PGW that is specified by a particular APN.

If the APN for Home Operator Services is set to the Default APN, then the gateway selection logic follows the "Default APN was selected" procedures described in Annex A.2 of 3GPP TS 23.060 [29]. If IMS services are revoked for a subscriber whose Default APN is the APN for Home Operator Services and the APN for Home Operator Services is a new/specific APN (see section 6.3.3.1), then the Default APN needs to be set to a different APN or else, the subscription barred completely. This is to prevent a complete denial of service to the subscriber and unnecessary traffic on the RAN and CN.

If the UE provides the APN for Home Operator Services (because it is not the default APN), then the gateway selection logic follows the “An APN was sent by the MS” procedures described in Annex A.2 of 3GPP TS 23.060 [29]. The UE does not provide the APN Operator Identifier so that the expected gateway selection logic will be the same as in the case where the network provided the APN for Home Operator Services as the Default APN.

6.3.3.3 Inter-PLMN roaming hand over

If the PDN connection to the APN for Home Operator Services is maintained after moving from one PLMN to another, because an inter-PLMN roaming agreement is in place, then the PGW need not disconnect the PDN connection to the APN for Home Operator Services unless the inter-PLMN roaming agreement in place enforces this PDN connection to discontinue.

NOTE 1: The behaviour recommended in the present section may not apply in the case of national roaming; that case is FFS.

6.3.3.4 Network-initiated deactivation and re-activation of the PDN connection to the APN for Home Operator Services

There are no requirements for the APN for Home Operator Services to be reactivated after a network-initiated deactivation. It is assumed a UE will activate PDN Connections to the APN for Home Operator Services only when required and subject to any other services also using the same APN.

6.3.3.5 Data Off related functionality

Data Off and Data off Enabled Services have been defined in IR.92 [30]. This section applies when the Home Operator configures a UE to use the APN for Home Operator Services for a Data Off Enabled Service, e.g., when UE with activated Data Off uses APN for Home Operator Services to access the XCAP server.

If the APN for Home Operator Services is used for a Data Off Enabled service, then downlink IP packets may be transmitted over the PDN connection of the APN for Home Operator Service. These IP packets can come from different sources:

- Unsolicited downlink IP packets; and
- IPv6 Router Advertisements.

NOTE: IPv6 Router Advertisement IP packets sent by P-GW are essential part of UE IP address configuration.

The following short-term solutions may be applied with corresponding restrictions:

- Deployment of a firewall to block unsolicited downlink IP packets. This may disable push services for all customers using the same APN and not only those customers who activate Data off functionality.
- Not counting these IP packets as data traffic in the HPMN. These IP packets may still be counted as data traffic in the VPMN.

6.4 Emergency PDN connection

An emergency PDN connection is established to a PGW within the VPMN when the UE wants to initiate an emergency call/session due to it detecting the dialling of a recognised emergency code (similar to how TS12 calls are recognised by UEs in CS). Any APN included by the UE as part of the emergency request is ignored by the network. This is further detailed in 3GPP TS 23.167 [33], Annex H. The emergency PDN connection must not be used for any other type of traffic than emergency calls/sessions. Also, the APN used for emergency calls/sessions must be unique within the VPMN, and so must not be any of the well-known APNs or any other internal ones than what is used for emergency. Whilst the 3GPP specifications do not provide any particular APN value, the value of "sos" is recommended herein. The APN for emergency calls/sessions must not be part of the allowed APN list in the subscription. Either the APN or the PGW address used for emergency calls/sessions must be configured to the MME/SGSN.

6.5 Security

Ensuring adequate security levels is not just a matter of deploying the right technology in the right place. It is critical that proper procedures are adequately defined and continuously adhered to throughout the entire security chain, particularly at an operational level. Security cannot be achieved by just one Provider in a network, it requires that every single Provider is fulfilling their part of the requirements.

Due to interconnect and roaming, the inner PMN is exposed to other networks. Consequently, measures to securely allow partners to interconnect in a controlled way have to be deployed, without revealing confidential information or facilitating fraud/abuse. PMN operators and IPX Providers are advised to adhere to the recommendations which are given in this section.

As GRX/IPX, as defined in GSMA PRD IR.34 [11] is a dedicated Roaming/Interworking Network which is separate from the Internet, it is thought to be reliable and more secure than the Internet. Thus no extra security features are needed in the Service Provider to Service Provider interface in addition to those which are standardised for the protocols in use. Since the Internet Protocol (IP) is not secure, it is still highly recommended to implement adequate security tools and procedures to prevent, monitor, log and correct any potential security breaches at all levels. Typically, this means as a minimum implementing a firewall (FW), (Border Gateway (BG) is typically used in MNO (Mobile Network Operator) networks) to enable ACL (Access Control Lists) or similar mechanisms to prevent unwanted access to Service Provider core networks, such as:

- Certain types of traffic (for example Small ICMP packets, HTTP and IPSec).
- The BG should also be able to filter out unnecessary traffic coming from the Inter-Operator IP Backbone. (Specifically, everything that is not agreed in an IPX Provider agreement).
- Filter out all IP traffic other than that which has been originated from IP address ranges of commercial roaming partners.
- Signalling rate limiting and DoS/DDoS prevention for all network protocols that are utilised should be implemented to protect the PMN from flooding attacks.

More detailed information on security demands and solutions can be found in the GSMA PRD IR.77 [9]. Background on the security requirements in this section can be found in Annex C.

NOTE: The texts “SP” (= Service Provider) and “ISH” (= IPX Service Hub) in square brackets (“*[SP]*”, “*[ISH]*”) denote if a security requirement is to be met by the Service Provider and/or by the IPX Service Hub.

6.5.0 GTP Firewall

The use of "GTP-aware" firewalls is considered good security practice for PMNs. When GTP-aware firewall is deployed for EPC/LTE, the firewall must support the GTPv2 protocol. GTP-aware firewalls comparing received GTP messaging against a "white list" of expected Information Elements (IEs) and their length and/or values (sometimes referred to as a "GTP Integrity Check") should be used with extreme caution. If the firewall is not upgraded to support the most recent 3GPP release of GTPv2 used by the network elements in the HPMN and VPMN, this feature breaks the extensiveness of GTP in that if either the HPMN or VPMN in a roaming partnership upgrade to a later 3GPP release of GTPv2, but have not upgraded the GTP-aware firewall in the other PMN, this results in any messages being dropped that contain any new (and thus "unrecognised") IEs or old IEs with different lengths and/or values. This silent discarding of GTP messaging can cause PDN connections to fail and, in the worst case, can deny any new PDN connections from being created. In this case, since LTE must have a default PDN connection, it will cause the UE's whole attachment to the VPMN to fail.

6.5.1 Diameter Security

Diameter does not provide end-to-end security on the application layer in the case of international roaming. Thus it relies on security mechanisms on lower layers and it requires additional security measures. They are all covered in this section and PMN Operators and IPX Service Hubs are recommended to adhere to these requirements in order to achieve secure inter-PMN signalling for LTE Roaming.

All security requirements provided in this section are in force, whichever DIAMETER application handled by DIAMETER nodes (S6a, S6d, S9, Gy…) are used.

If the DEA is outsourced to the IPX Provider (see Figure B-6), the IPX provider is responsible for deploying and maintaining all the security measures described for the Service Provider in this section.

6.5.1.1 Network Domain Security for IP

The IP level security shall be enforced on each hop of the hop-by-hop architecture.

A hop is defined between 2 Diameter aware nodes (Diameter agent or Diameter end point) and IP level security measures on this hop shall be defined in order to guarantee following security services:

- Privacy, i.e. no third party gets access to the traffic between these two nodes
- Traceability, i.e. each node knows which previous party sent or forwarded a message
- IP anti-spoofing

Service providers are free to choose if they wish to have a direct bilateral connection to the peer Service Provider or if IPX Service Hubs are involved. As a consequence, the three options which are described next are applicable.

NOTE: The network elements in the figures are logical components and it is at the discretion of the IPX provider and PMN operator to decide if they are kept separate or joined in a single physical component.

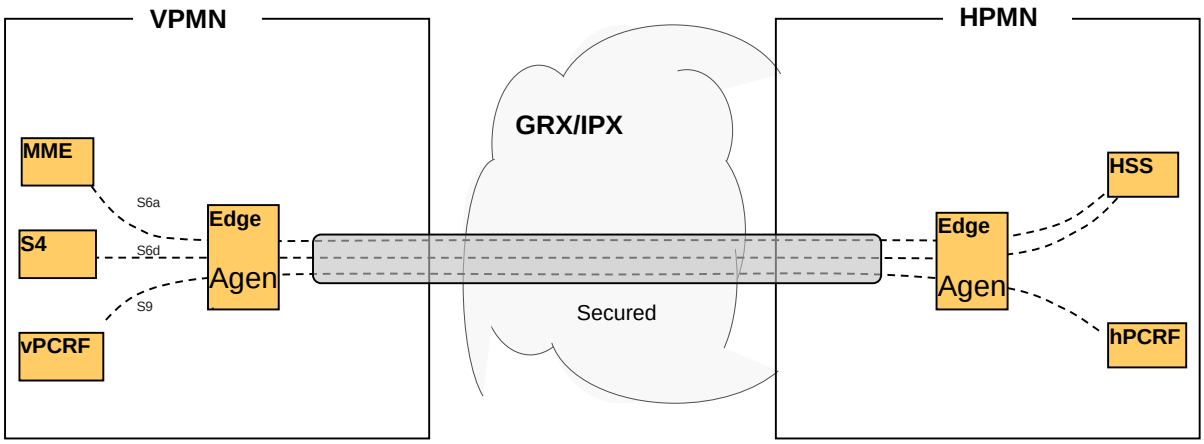

Figure 6.5.1-1: Security for IPX Transport connectivity

Figure 6.5.1-1 shows the PMN interconnection in bilateral mode with direct peer connections between PMN Edge agents, which is secured allows secured connections between PMNs.

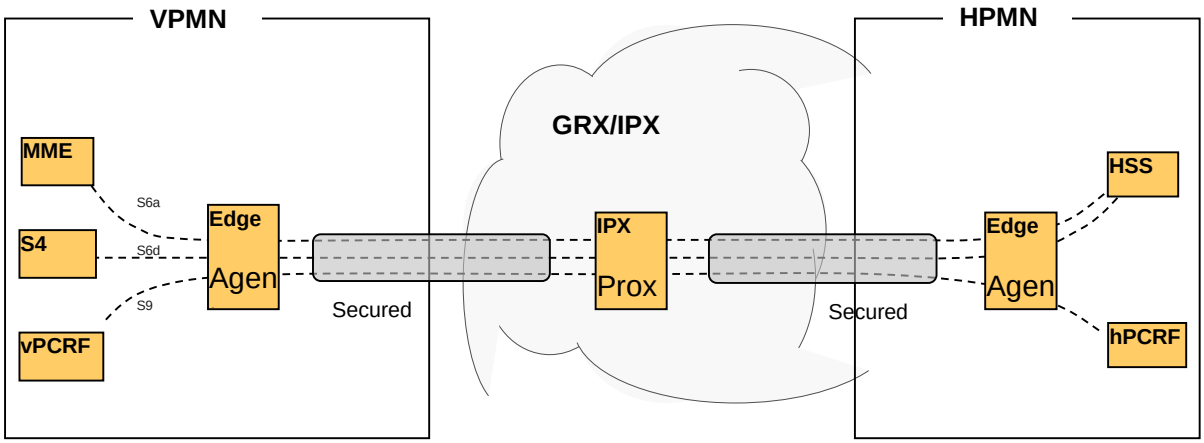

Figure 6.5.1-2: Security for IPX Service Hub connectivity

Figure 6.5.1-2 shows the PMN interconnection utilising the “IP Service Hub” connectivity option according to GSMA PRD IR.34 [11]. This option is secured hop-by-hop between each PMN and the Service Hub. The simplified cloud which is titled GRX/IPX in figure 6.5.1-2 may resemble one or two IPX providers. The security is only terminated at PMNs and Service Hubs. If there are two Service Hubs involved the communication between IPX Service Hubs shall be secured too. This is depicted in Figure 6.5.1-3.

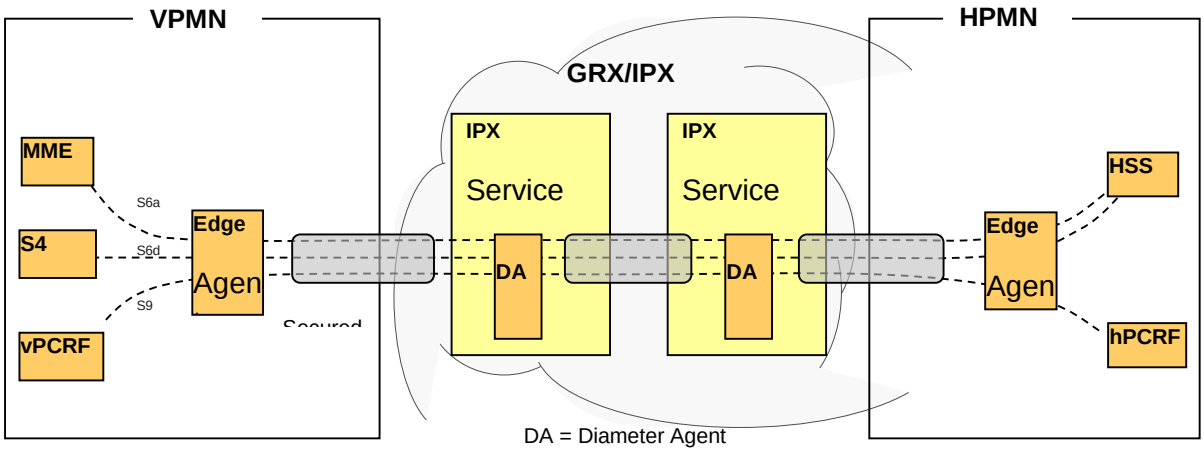

Figure 6.5.1-3: Security for connectivity with two IPX Service Hubs

According to GSMA PRD IR.34 [11], details of the “IPX Service Transit” connectivity option are for further study. If this option is used, it needs to follow the same security model as the “IP Service Hub” connectivity option.

In the figures above, a secure Diameter hop is depicted by a grey tunnel symbol. In any model, both ends of a secured hop are responsible for providing the above mentioned security services. The IP messages exchanged in each hop can be protected by one of the following technical network implementations:

- Direct physical connections
- IPsec connections (see Appendix D for more details)
- Other networks that create a logical bilateral link between the two ends of a Diameter hop connection (eg. MPLS network)

These network implementations are the foundation to deliver the aforementioned security services privacy, traceability, and IP antispoofing.

6.5.1.2 Network Layer and Transport Layer Security

It is recommended to control which IP traffic can be sent and received within the secured connection. This is done for strict separation of the inner networks of PMN operators. If applied, a PMN cannot act as forwarder of IP traffic between PMNs and the PMN protects itself from unwanted traffic. Some network elements (at IP or Diameter level) on the network edge should apply the following IP filters.

There are different filters for the bilateral mode (see Figures 6.5.1-2, B-1, B-2, B-3, and B-4), and for the transit mode (see Figures 6.5.1-3, B-5, and B-6). For bilateral mode allowed IP addresses of the peer should be taken from the IR.21 RAEX DB. For transit mode peer IP addresses should be provided by the IPX provider.

[SP] IP filters for bilateral mode:

- Incoming IP packets should originate from the range of IP addresses which belong to the peer PMN at which the secure Diameter hop terminates.

- The destination IP address of incoming IP packets should belong to the range of IP addresses of the PMN which receives the packet.
- Outgoing IP packets should originate from the range of IP addresses of the PMN which sends the packet.
  - The destination IP address of outgoing IP packets should belong to the range of IP addresses which belong to the peer PMN at which the secure Diameter hop terminates.

[SP] IP filters for transit mode:

- Incoming IP packets should originate from one of the IP addresses of the Diameter Agents of the IPX Hub which is the peer of the IPsec tunnel.
- The destination IP address of incoming IP packets should belong to the range of IP addresses of the PMN which receives the packet.
- Outgoing IP packets should originate from the range of IP addresses of the PMN which sends the packet.
- The destination IP address of outgoing IP packets should be one of the IP addresses of the Diameter Agents of the IPX Hub at which the secure Diameter hop terminates.

For further restriction, instead of allowing the entire range of IP addresses of a peer PMN or IPX Hub, dedicated IP addresses of DEA can be used.

[ISH] IPX Hubs should also implement these filters. However, since IPX Hubs communicate with Service Providers and with other IPX Hubs the filters differ in the sense that peer networks are not only PMN, but also a set of PMNs which are managed by the peer IPX Hub.

In the case where a PMN decides to outsource the DEA to their IPX-Provider (see Figure B-6, the IP filters should be applied anyway. The Border Gateway or the Edge Router can do this.

On transport layer packets should be restricted to the Diameter protocol only (i.e. the SCTP payload protocol ID (RFC 4960 sect 14.4) should be set to ‘DIAMETER’).

6.5.1.3 Diameter Base Protocol Security

Sanity checks on the application layer are required to only process allowable messages.

To cover all end-to-end Roaming applications (S6a, S6d, S9, Gy…) and based on the assumptions that DIAMETER Agent (DEA/IPX DA) should be used as Relay Agent, the checks are focusing on AVPs of the Base Protocol that are commonly used to route Requests : Origin Realm/Host, Destination Realm/Host, Application Id, Command Code or commonly used to provide routing related information, such as Route Record, Session id, Proxy Info.

The following should be done:

- *[SP]* Filter Diameter messages to accept only supported Application IDs, Command Codes and AVPs.

- *[SP, ISH]* Compare all AVP that identify the origin and the destination (that i Origin/Destination Realm/Host and Visited PMN ID) to determine consistency between them.
- *[SP]* Verify CER/CEA Diameter Messages against Diameter Servers and capabilities declared in IR.21 RAEX DB.
- *[SP]* Check if Origin Realm/Host is from a PMN which has a roaming agreement with own PMN. Information related to this PMN is taken from IR.21 RAEX DB during provisioning of the filter configuration in the DEA.
- *[SP, ISH]* Check if the Route Record AVPs (if they exist) are sound in that the documented route is possible for the source and destination given in the message.
- *[SP]* Egress Diameter messages are received by the DEA from an inner network element. They are only sent to their destination if all the AVPs which determine the origin are addressing a network element within the sending (i.e. one's own) PMN.
- *[SP]* Ingress Diameter messages are received by the DEA from an outer network element. They are only sent to their destination if all the AVPs which determine the destination are addressing a recipient which is inside one's own PMN.
- *[SP]* "Stateful" inspection which only permits ingress messages in a defined order, according to IETF RFC 3588 [3] states (e.g. no answer should be processed if no request has been issued).
- *[SP]* Some AVP which may disclose internal information of a PMN but which is not required outside the PMN should be changed/removed from all egress messages ("topology hiding"). The general rules applied may be:
    - To hide all Diameter Host Names.
    - To hide the number of Diameter Nodes in the network by hiding routing and identity details.

  The DEA should determine messages to apply topology hiding based on:
    - Their connection type and origin.
    - Application Routing Rules-like criteria: Application-ID, Origin-Realm, Origin-Host, Destination-Realm, Destination-Host.

  In addition, topology hiding should also prevent other networks from determining the routing used within a network by hiding the path that Diameter messages use when being routed through the network. This is accomplished by:
    - Hiding Diameter names in Route-Record AVP and using generic names in their place.
    - Reinserting the correct names if the request reenters the home network.
    - Hiding Diameter host names in other base Diameter AVPs such as: Session-ID and Proxy-Info.

  To prevent other networks from discovering the number of hosts (e.g. HSS) in the network and their identity, topology hiding should hide:

- Diameter name in Origin-Host AVP in requests from a local host (e.g. HSS) to a foreign host (e.g. MME).
- Diameter name in Origin-Host AVP for answers from a local host (e.g. HSS) to a foreign host (e.g. MME).

In order to ensure that Diameter messages will be routed correctly, the Topology Hiding shall not alter origin-realm AVP as defined in 3.1.3.4 and it is encouraged to follow hostname naming rule as well.

6.5.1.4 Cross-Layer Security

There is a need to validate IP addresses against Diameter AVPs. Validation differs between bilateral mode and transit mode.

During the peering phase (SCTP associations setup and CER/CEA exchange), following rules should be followed to ensure that the peering is done with the right peer.

Bilateral mode:

- *[SP]* Check if the source IP address of ingress IP packets matches the IP address range of the PMN which is identified in the Origin Realm/Host AVP of the Diameter header in the message.
- *[SP]* Vice versa, check if the destination IP address of ingress messages matches the IP address range of the PMN which is identified in the Destination Realm/Host AVP of the Diameter header in the message.
- *[SP]* IP addresses and Diameter AVPs should also be checked against the entries in the IR.21 RAEX DB.

Transit mode:

- *[SP]* At the PMN edge, check if the source IP address of ingress IP packets matches the IP address of the IPX Hub's DEA via which messages from the source PMN are received. The source PMN is identified by Origin Realm/Host in the message.
- *[SP]* Vice versa, at the PMN edge, check if the destination IP address of egress IP packets matches the IP address of the IPX Hub's DEA via which messages are sent to the destination PMN. The destination PMN is identified by Destination Realm/Host in the message.
- *[ISH]* The IPX Hub is required to make sure that it performs the cross layer checks for Diameter traffic that is received from directly connected Diameter peer Service Providers. In particular, it is required to check that the Origin-Realm AVP corresponds to the right network (cf. 3GPP TS 29.272 [8]). For an IPX Hub, the peer cannot only be a Service Provider. Another IPX Hub can be the peer as well. For such inter-Hub connections, the above cross layer checks are not strictly needed if all IPX Hubs perform the check on ingress traffic from Service Providers, but could be adapted accordingly.

In addition, for routing DIAMETER transactions (S6a, S6d, S9, Gy…) there are other controls that a DEA shall support in both modes:

- *[SP, ISH]* The DEA shall implement anti-spoofing mechanisms for all Diameter applications. To achieve such requirement, DEA shall implement a system of whitelist for each peer it is connecting. This list will contain the list of realms that the peer is autoritative on. If a message on any application is received with an origin-realm that is not part of this list, the request shall be rejected with a configurable error.
- [SP] The DEA shall not forward traffic from one outer network interface to another. It only forwards traffic from an inner to an outer interface or the other way round.

6.5.1.5 Diameter Application Security Depending on the Diameter Application (e.g. S6a, S9, Gy, ...)

Service Providers should implement additional application-specific security checks in Diameter end points. For S6a, for example, an additional check would be to compare contents of the S6a Visited-PLMN-ID AVP with the Base Protocol's Origin-Realm AVP, which in turn has been verified by the lower layer checks mentioned above.

6.5.1.6 Discovery of Peer PLMN Network Elements

According to Section 3.1.3.4 there are two possible mechanisms to discover the “next hop”:

- Manually configured static entries in the Peer and Routing Tables;
- Dynamic Discovery using DNS (S)NAPTR.

From a security perspective it is recommended to use static entries. The use of dynamic discovery of DEA peers raises several security issues mainly if a GRX/IPX DNS is used. More details are discussed in Appendix C. If dynamic DEA discovery is chosen, the following requirements should be met by the DEA:

- [SP] The peer and routing table entries created via DNS should expire (or be refreshed) within the DNS TTL. According to IETF RFC 3588 [3], the routing table entry’s expiration should match the peer’s expiration value in the peer table.
- [SP] DNS RRs (Resource Record) should be validated via DNSSEC to protect against DNS-vectored attacks.
- [SP] The ACLs defined in Section 6.5.2.3 should be applied in order to verify roaming agreement and authorization for the DEA peer to act in the declared role for the declared capabilities.
- [SP] Security mechanisms should be implemented to protect DEA against DNS reflection/amplification attacks (see Annex C for more details).

6.5.1.7 Responsability Cascade

The investigation of the root causes of fraudulent interconnect traffic is often hindered by the fact that such investigation relies on the good will of each transit carrier to collaborate in order to identify the party who originated the fraudulent traffic. The investigation of fraudulent traffic often results in the party who originated the traffic to receive a warning from their access operator who usually withhold the identity of their customer who originated the fraudulent traffic as they are under no obligation to provide this identity. The lack of

identification of the party who originated the fraudulent traffic often prevents identifying the root cause and by consequence allows fraudsters to use the services of operators for sending fraudulent traffic with a complete impunity.

Fraudsters often exploit a vulnerability of the SP/ISH who fails to support the security recommendations provided by this document.

Looking at security recommendation that have been described previously, it appears that ISH are the ones which can ensure such hop-by-hop security.

In case of a fault is discovered, the cascading responsibility should be applied, a SP asking to its ISH for finding the faulty network, the ISH asking to its partner and so on.

ISH should identify the party responsible for sending the fraudulent traffic and the method it has chosen to ensure this traceability. Otherwise, the ISH can be asked for some penalties, for example including not to receive payment for the fraudulent traffic.

6.6 Diameter Roaming Hubbing

To support LTE Roaming Hubbing, IR.80 defines three architecture alternatives: Direct connection, Origin/Destination realm based routing and Destination realm modification.

6.6.1 Direct connection

When using Direct connection architecture the MNOs are directly connected via Diameter signalling with a Open Connectivity Roaming Hub (OCRH). The MNOs and OCRH are routing all Diameter messages based on Destination realm without manipulation. This alternative is depicted in Figure 6.6.1.

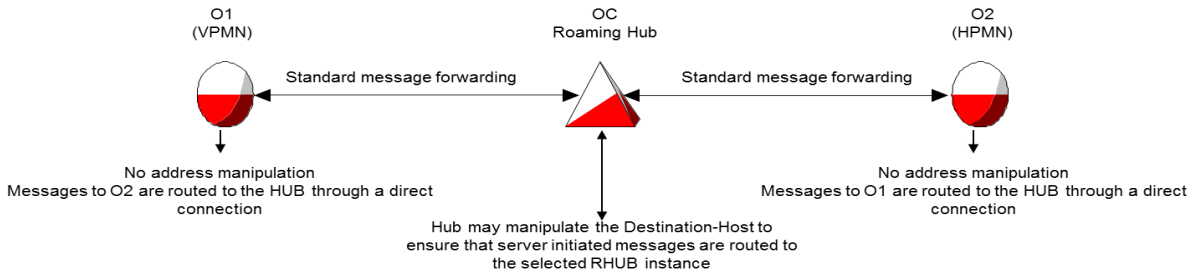

Figure 6.6.1: Direct connection

6.6.2 Origin/Destination realm based routing

In Origin/Destination realm based routing alternative the MNOs are connected to the OCRH through an IPX carrier. In order to achieve the Origin/Destination realm based routing, the IPXs must supply the MNOs with advanced Diameter routing capability based on Origin/Destination realm. The rule applied by the IPX provider is, if Origin realm is O1's realm and Destination realm is O2's realm, to route the Diameter message to OC Roaming HUB. This alternative is depicted in Figure 6.6.2.

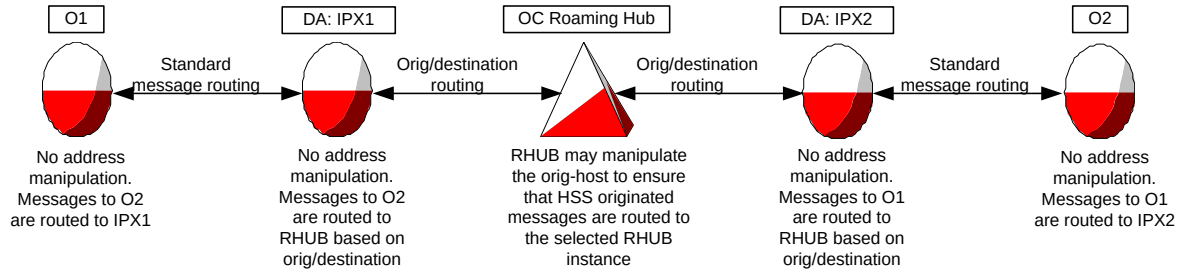

Figure 6.6.2: Origin/Destination realm based routing

6.6.3 Destination realm modification

In a Destination realm modification alternative, the MNOs are connected to the OCRH through an IPX carrier. Destination realm is modified by the IPX, appending the suffix ".hub-realm". The OCRH removes the suffix from the Destination realm to get back to the initial Destination realm and performs a standard routing based on the Destination realm. Therefore this alternative relies on an agreement between OCRH and O1 and implies that the IPX provider of O1 must support the Destination realm manipulation. This is depicted in Figure 6.6.3.

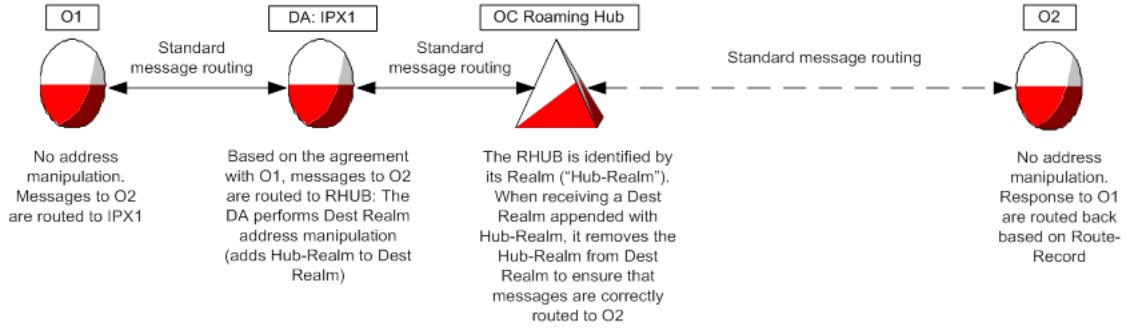

Figure 6.6.3: Destination realm modification

6.7 Default APN

The default APN can be set either to the IMS well-known APN or to an APN other than the IMS well-known APN, as described in section **Error! Reference source not found.**. The onsequences of selecting the one or the other APN as default APN are as follows:

If the default APN in the HSS is set to the IMS well-known APN, then

- A PDN connection to the IMS well-known APN is always established during the E-UTRAN initial attach for UE that supports GSMA PRD IR.92 [30], independent of whether the user is subscribed to any IMS service or not.
- A PDN connection to the IMS well-known APN is always established during the E-UTRAN initial attach for UE that does not support GSMA PRD IR.92 [30] and that does not provide an APN.
- The UE (which gets connected to the IMS well-known APN) needs to establish an additional PDN connection to an APN other than the IMS well-known APN in order to use non-IMS services, for example, to access the Internet, and is charged accordingly.

NOTE: The IMS well-known APN works in this scenario as a zero-charging “dummy” APN for the user that is not subscribed to any IMS service, that is, the UE is connected to the EPC but it is not able to use any data service.

If the default APN in the HSS is set to another APN than the IMS well-known APN, then

- A PDN connection to the IMS well-known APN is never established during the E-UTRAN initial attach for UE that supports GSMA PRD IR.92 [30], independent of whether the user is subscribed to any IMS service or not.
- A PDN connection to such default APN is always established during the E-UTRAN initial attach for a UE that does not provide an APN during initial attach, for example, for a UE that supports IR92 [30].
- The UE that supports GSMA PRD IR.92 [30] and which gets connected to such default APN needs to establish an additional PDN connection to the IMS well-known APN to use IMS services as specified in GSMA PRD IR.92 [30].
- The UE (which gets connected to such default APN) is able to use the APN other than the IMS well-known APN for its purpose, for example, in case the default APN is configured to be the one used for Internet access, then the UE can access the Internet using the PDN connection that is established during the E-UTRAN initial attach.
- Unwanted data charging may occur on the PDN Connection to the APN other than the IMS well-known APN if the UE is configured to not use data when roaming, unless that APN other than the IMS well-known APN is a zero-charging APN. If default APN is the APN for Home Operator Services, see section 6.3.3.5 “Data off related functionality” of this document.

Irrespective of which APN is configured as default APN, the following should be considered:

- The default APN may be used also on other accesses than E-UTRAN, e.g., on UTRAN connected to S4 SGSN.
- The PDN connection to the default APN may be handed over between 3GPP accesses, e.g., between E-UTRAN and UTRAN, and used on target access.

Independent of being configured as the default APN or not, the IMS well-known APN is zero-charged on packet-level for some or all IMS services in case of local breakout (see PRD IR.65 [31]) and must not be used by any non-IMS application (see PRD IR.92 [30]). However charging for the amount of data transferred may occur if the PDN connection to the IMS well-known APN is

- Home routed and used for IMS services.
- Used for IMS services that are not zero-charged on packet-level.

6A Technical Requirements for static QoS support

6A.1 Home Routed architecture and S8 protocol is GTP

This section illustrates the required functionality that is needed in the VPMN and the HPMN in order to support static QoS for LTE roaming. Static QoS refers to the QoS that is provided

for the Default Bearer that is set up for any PDN connection that is requested by a roaming UE.

Support of static QoS whilst roaming has two aspects:

1. Ensuring that the QoS parameters of an inbound roamer are within the limits of the roaming agreement.
2. Enforcement of the actual QoS by the VPMN.

6A.1.1 Limiting QoS for inbound roamers to the limits of the roaming agreement

6A.1.1.1 Requirements for the VPMN

In order to ensure that a PDN connection can be established successfully while at the same time not violating the QoS policies of the VPMN for inbound roamers from a given HPMN, the following functionality is required for the VPMN:

- When an inbound roaming UE performs an Attach, the MME/S4-SGSN of the VPMN shall, upon having received the inbound roamer's subscription from the HSS, compare the QCI, the ARP, and the APN-AMBR value as contained in the subscription for the chosen APN with the pre-configured range of supported QCIs and ARPs and the supported range of APN-AMBR values for the HPMN. (Note: These ranges are configured based on the roaming agreement with the respective HPMN.)
- If the MME/S4-SGSN detects that a value from HLR/HSS is outside those ranges, the MME/S4-SGSN shall change/downgrade the related value to a configured default value for the related HPMN (see also TS 23.401, section 4.7.2.1). If the QCI, ARP and APN-AMBR values are in line with the roaming agreement, then the MME/S4-SGSN shall accept these values. If the MME/S4-SGSN detects that the APN-AMBR and/or ARP PCI values from the PGW or PCRF in the HPMN violate the roaming agreement, it is recommended that the MME/S4-SGSN downgrades the bandwidth and/or the ARP PCI values to the configured value based on the roaming agreement.

NOTE: The downgrade of the ARP PVI value without informing the HPMN can cause that a subscriber loses assigned resources in a congestion situation.

The same requirements apply when a roaming UE requests another PDN connection using the UE requested additional PDN connectivity procedure or when the HPMN updates the subscription of the outbound roamer using the HSS Initiated Subscribed QoS Modification procedure.

6A.1.1.2 Requirements for the HPMN

In order to ensure that a PDN connection can be established successfully, the following functionality is required for the HPMN:

- When a roaming UE performs an Attach, requests an additional PDN connection or if the HPMN updates the subscription using the HSS Initiated Subscribed QoS Modification procedure, then the HPMN shall accept the QoS values (QCI, ARP, APN-AMBR) as received from the VPMN, that is, the HPMN shall not change the

QoS values received from the VPMN during the Attach, the UE requested additional PDN connectivity or the HSS Initiated Subscribed QoS Modification procedure.

NOTE: The HPMN may attempt to change the QCI, ARP and APN-AMBR values after the Attach, UE requested PDN connectivity procedure or the HSS Initiated Subscribed QoS Modification procedure, respectively, have been completed.

6A.1.2 Enforcement of QoS by the VPMN

If a VPMN has agreed to provide QoS in a roaming agreement, then the VPMN is required to engineer its access and core networks to fulfil the correspondent performance characteristics (Resource Type, Priority, Packet delay Budget and the Packet Error Loss rate) according to 3GPP TS 23.203 [34] Table 6.1.7: Standardized QCI characteristics for the QCIs covered by the roaming agreement.

7 Technical Requirements for Dynamic Policy and Charging Control

7.1 Home Routed architecture and S8 protocol is GTP

It is up to the HPMN to implement a PCC infrastructure implementation, but this infrastructure will be required if the HPMN provides services requiring dynamic policy and charging control. For instance, RTP based video streaming services require guaranteed bit rates and hence require the setup of a Guaranteed Bit Rate (GBR) bearer from the PGW that could be requested by the hPCRF. "Anti-bill shock" is another example where PCC can be helpful. When the customer reaches the amount of money or roaming data defined by the HPMN legal authority, the PCRF or the OCS can ask the PGW to terminate the PDN connection.

In this scenario and according to 3GPP, the entire PCC infrastructure remains inside the HPMN. See the architecture diagram below. The same PCC architecture is also used for the case of having a SGSN connected to PGW.

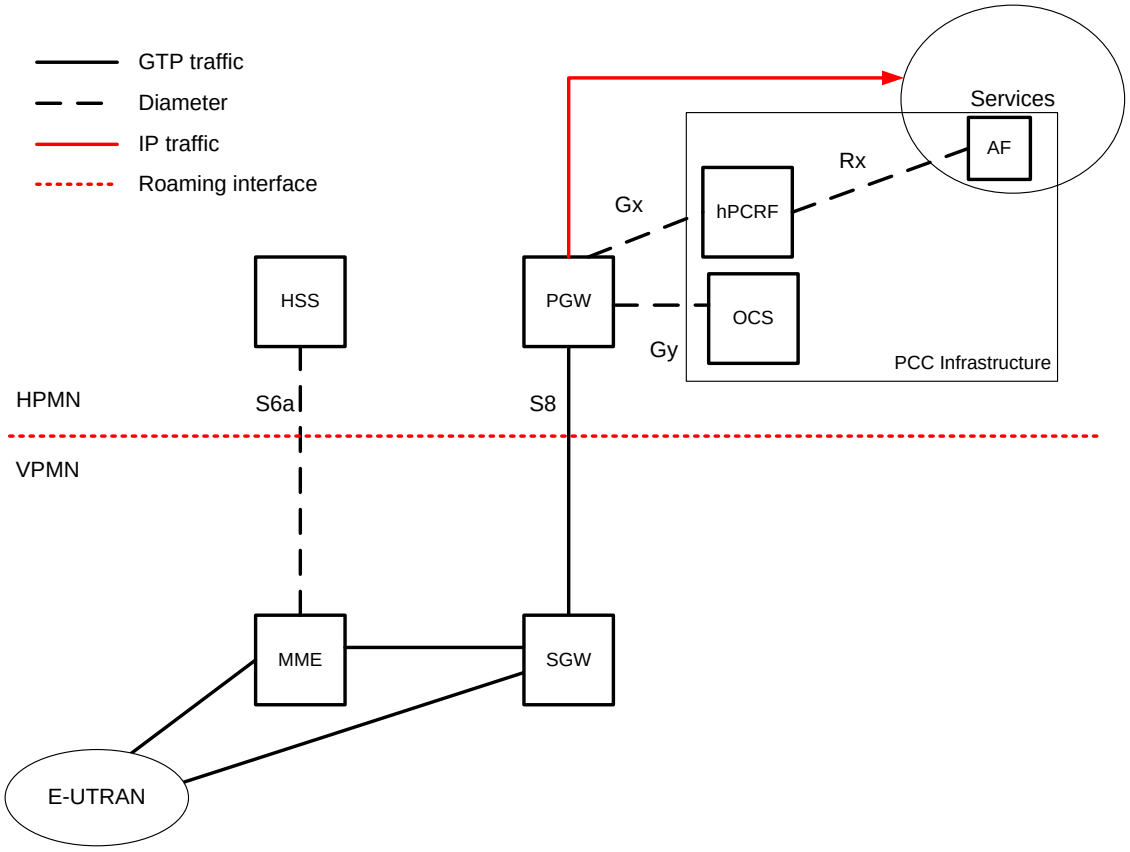

Figure 7.1-1: PCC Architecture with Home Routed architecture and S8 GTP based

Dynamic policy control is possible although the VPMN has not implemented a PCC infrastructure for its own purpose. However, there are requirements that must be supported:

1. The VPMN must support the relevant bearer management procedures (see section 7.1.1).
2. The VPMN and the HPMN must ensure that QoS parameters of roamers are within the limits of the roaming agreement (see section 7.1.2).
3. The VPMN must enforce the actual QoS (see section 7.1.3).

7.1.1 Bearer management procedures for dynamic policy and charging control

If services which require dynamic QoS and/or charging are deployed and the default bearer QoS is used, it will be required that the VPMN supports the following bearer management procedures in EPC and in E-UTRAN regarding the Initial Attach according to 3GPP TS 23.401 [1]:

1. Create session response: The PGW may modify the APN-AMBR and QoS parameters (QCI and ARP) associated with the default bearer in the response within the limits defined in the roaming agreement.

If services which require dynamic QoS and/or charging are deployed and the default bearer QoS is not sufficient, it is required that the VPMN supports the following bearer management procedures in EPC and in E-UTRAN:b

1. Dedicated bearer activation this procedure is invoked by the PGW if for example the already established bearers' QoS cannot support the new requested service.
2. PGW initiated bearer modification – the PGW could initiate a bearer modification procedure based on HPMN decision or in response to AF initiated bearer modification.

NOTE: UE requests for additional resources and UE initiated QoS modification of a bearer initiated are rejected by the network.

7.1.2 Limiting QoS for inbound roamers to the limits of the roaming agreement

7.1.2.1 Requirements for the VPMN

When receiving a Dedicated bearer activation request from the HPMN, the VPMN's MME/S4-SGSN shall compare the QCI, ARP, GBR and MBR values contained in the request with the pre-configured range of supported QCI, ARP, GBR and MBR values for the HPMN. (Note: theses ranges are configured based on the roaming agreement with the respective HPMN.) If the MME/S4-SGSN detects that MBR and/or ARP PCI values are outside the range, the MME/S4-SGSN downgrades MBR and/or ARP PCI values to the values based on roaming agreement and accept the request. For QCI, ARP Priority Level (PL) and GBR values, if the MME/S4-SGSN detects that a value is outside those ranges, the MME/S4-SGSN shall reject the dedicated bearer activation request. If the QCI, ARP, GBR and MBR values in the request are within the range, the MME/S4-SGSN shall accept the request.

When receiving a PDN-GW initiated bearer modification request, the VPMN's MME/S4-SGSN shall compare the QoS values contained in the request (QCI, ARP and APN-AMBR or GBR and MBR for non-GBR bearers or GBR bearers, respectively) with the pre-configured range of supported QCI, ARP, APN-AMBR, GBR and MBR values for the HPMN. (Note: these ranges are configured based on the roaming agreement with the respective HPMN.) If the MME/S4-SGSN detects that the HPMN attempts to increase MBR and/or ARP PCI values outside the range, the MME/S4-SGSN downgrades MBR and/or ARP PCI to the values based on roaming agreement and accept the request. For QCI, ARP PL and GBR values, if the MME/S4-SGSN detects that a value is outside those ranges, the MME/S4-SGSN shall reject the bearer modification request. If the QCI, ARP, GBR and MBR values in the request are within the range, the MME/S4-SGSN shall accept the request.

When a roaming UE requests additional resources or requests modification of resources using the UE requested bearer resource modification request and the VPMN supports UE requested bearer resource modification requests, then this triggers a dedicated bearer activation or a PDN-GW initiated bearer modification by the HPMN. In this case, the MME/S4-SGSN shall behave accordingly as described in the previous two paragraphs.

7.1.2.2 Requirements for the HPMN

When a Policy and Charging infrastructure is deployed in the HPMN, then the HPMN's PCRF provides the QoS parameters to the HPMN's PDN-GW, which are in turn sent to the VPMN as part of all bearer management procedures listed in section 7.1.1.

In order to ensure that the requested QoS sent to a VPMN is within the limits of the roaming agreement, the HPMN's PCRF shall – in case of an outbound roamer - only provide QoS parameters (QCI, ARP, APN-AMBR or GBR and MBR, respectively) to the HPMN's PDN-GW, which are within the limits of the roaming agreement with the respective VPMN.

7.1.3 Enforcement of QoS by the VPMN

If a VPMN has agreed to enforce QoS in a roaming agreement, then the VPMN is required

- To engineer its access and core networks to fulfil the correspondent performance characteristics (Resource Type, Priority, Packet delay Budget and the Packet Error Loss rate) according to 3GPP TS 23.203 [34] Table 6.1.7: Standardized QCI characteristics for the QCIs covered by the roaming agreement.
- To support GBR bearers and provide the requested guaranteed bit rates within the limits as agreed as part of the roaming agreement.

7.2 Home Routed architecture and S8 protocol is PMIP

In this scenario and according to 3GPP, the PCC infrastructure is not completely inside the HPMN. Dynamic Policy Control is only possible if the VPMN has implemented the Bearer Binding and Event Reporting Function in the Visited SGW and a vPCRF. The partners must also implement the S9 interface.

See architecture diagram below.

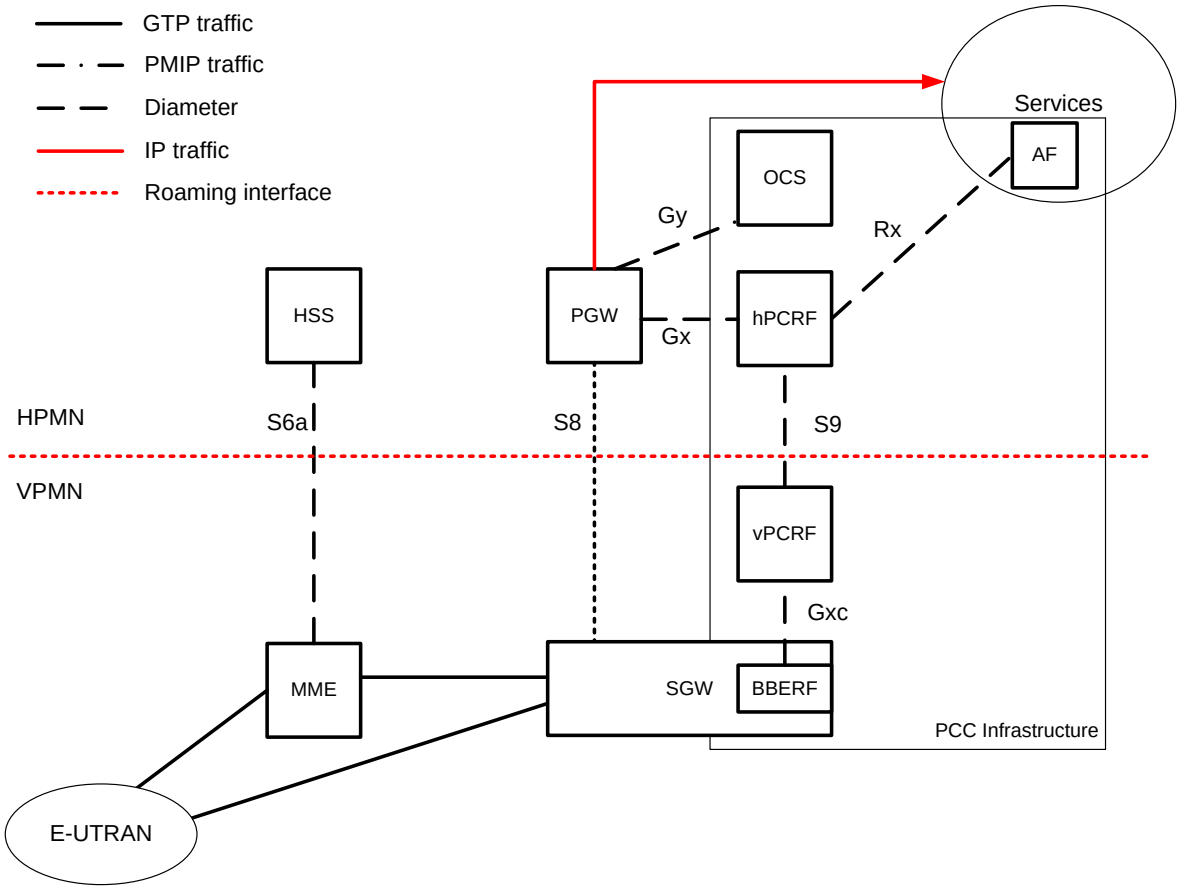

Figure 7.2-1: PCC Architecture with Home Routed architecture and PMIP based

It is also required that the VPMN follows the above recommendations for QoS engineering in its network.

7.3 Local Break Out architecture

This is the architecture for IMS roaming (as defined in [30]) with some more details of the PCC architecture.

In this scenario and according to 3GPP, the PCC infrastructure is shared between the HPMN and the VPMN. Dynamic Policy Control is only possible if the VPMN has implemented its own PCC infrastructure that is to say a vPCRF, a Policy and Charging Enforcement Function (PCEF) and a Bearer Binding and Event Reporting Function (BBERF) if PMIP is the S5 protocol. Both networks must have implemented a PCC infrastructure.

However for VoLTE, S9 interface is not required when the PCRF in the visited network is configured with static policy rules for roaming subscribers and also the Gy interface (online flow based charging)is optional. VoLTE online charging is performed in the HPMN IMS and does not require charging at bearer level. As the procedure to setup a dedicated bearer for the voice call is also specified in [31], there is no need to inform the hPCRF in the HPMN or to ask for its procedure approval as it has already been approved by the IMS in the HPMN.

See architecture diagram below. The same PCC architecture is used also for the case an SGSN is connected to PGW.

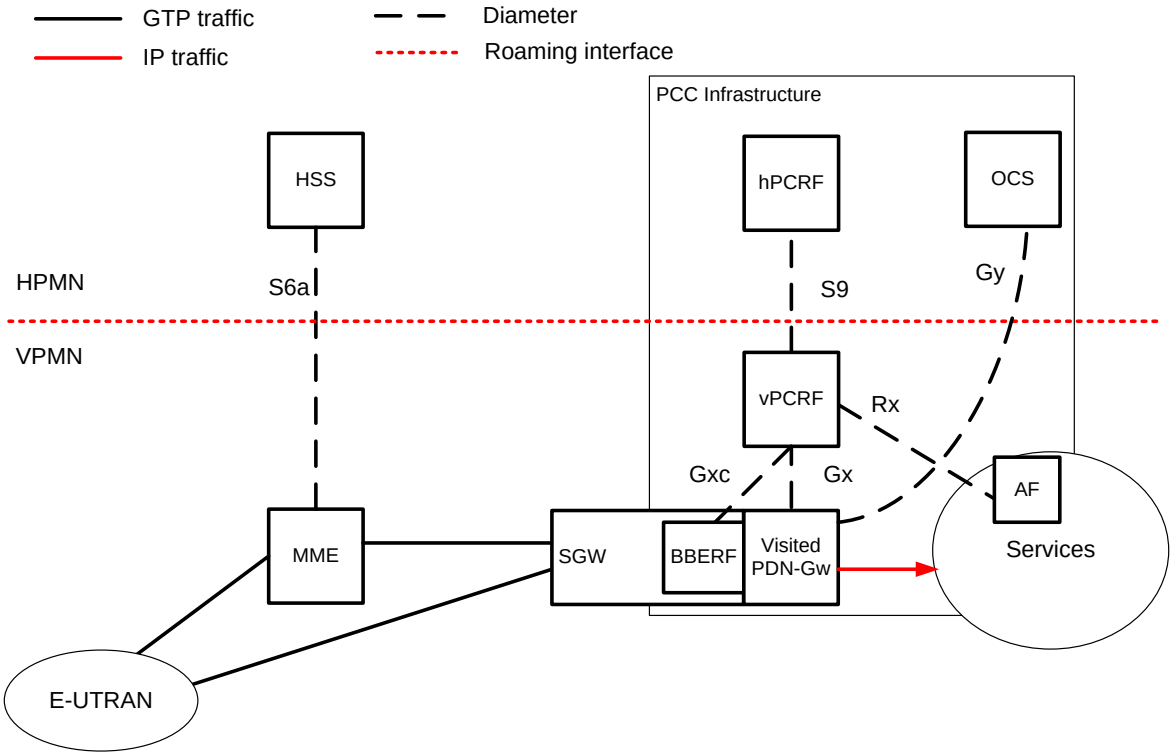

Figure 7.3-1: PCC Architecture with Local Break Out architecture

If GTP is S5 protocol, then the VPMN must support the bearer management procedures in EPC and in E-UTRAN listed in Section 7.1.1.

If PMIP is S5 protocol, then the VPMN must support the bearer management procedures in EPC and in E-UTRAN listed in Section 7.1.1.

It is also required that the VPMN follows the recommendations for QoS engineering in its network listed in Section 7.1.3.

Annex A Testing Framework

IREG test cases for LTE and EPC data roaming, CS Fallback and SMS over SGs are described in IR.23 [35] and IR.38 [54].

Annex B Diameter Architecture Implementation

Figure B-1 illustrates the case where the PMN has implemented relays at the edge and application specific proxies in the inner domain including a Diameter Routing Agent (as defined in TS 29.213 [49]) for S9 and Rx applications.

The PMN has a bilateral interconnection with other PMNs.

Extended NAPTR [26] or static entries can be used at the DEA to find the inner application specific proxy.

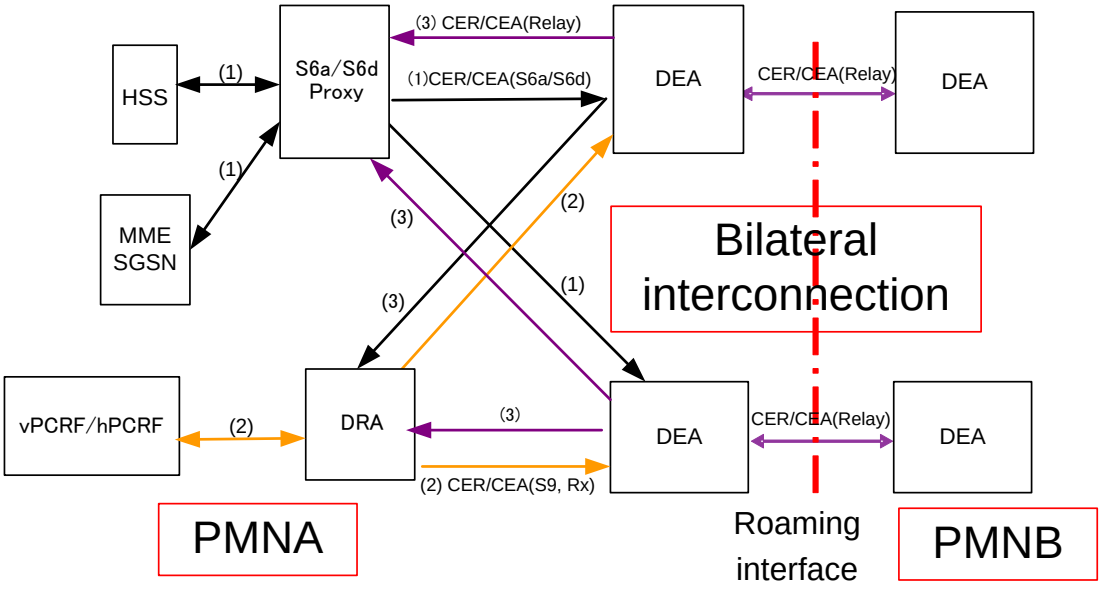

Figure B-1: Diameter architecture example 1

Figure B-2 illustrates the case where the PMN has implemented DEA that proxy all applications and no inner domain proxy.

The PMN has a bilateral interconnection with other PMNs.

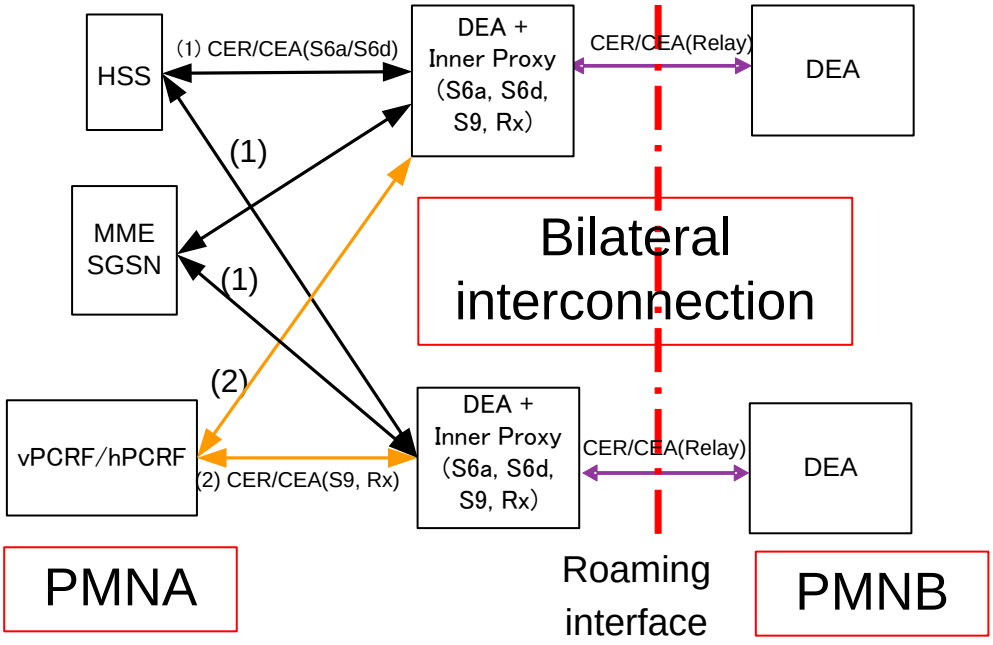

Figure B-2: Diameter architecture example 2

Figure B-3 illustrates the case where the PMN has DEAs that are application specific proxies and no inner domain one. The DEA relays the Application messages that it is not able to proxy to the other DEA(s).

The PMN has a bilateral interconnection with other PMNs.

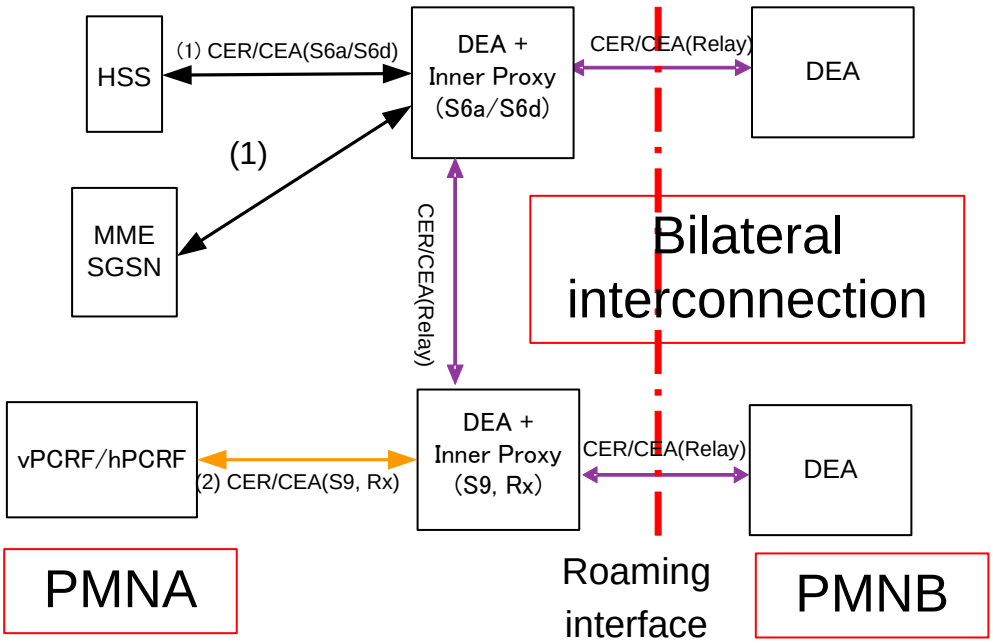

Figure B-3: Diameter architecture example 3

Figure B-4 illustrates another Diameter architecture implementation which is a variant of examples 1, 2 and 3 where the PMN has:

- DEAs that are S6a/S6d proxies and relays for other applications (S9 and Rx in the current example),
- A Diameter Routing Agent (as defined in TS 29.213 [49]) to manage S9 and Rx applications in the inner domain

The PMN has a bilateral interconnection with other PMNs.

The Extended NAPTR [26] or static entries can be used at the DEA to find the inner application specific proxy.

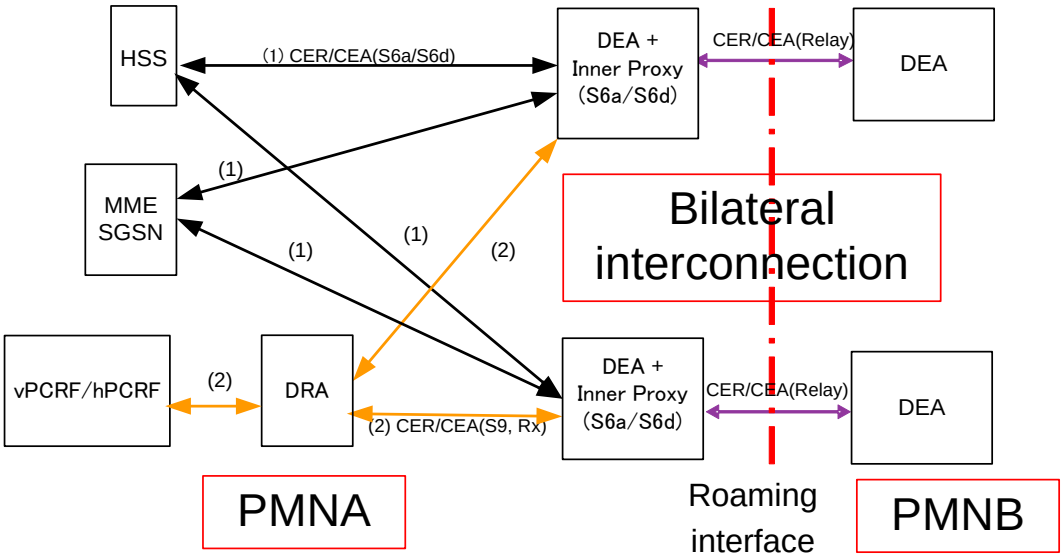

Figure B-4: Diameter architecture example 4

Figure B-5 illustrates the case where the PMN has implemented DEAs that are application specific proxies. More those proxies are not able to relay messages of other applications to inner domain agents. The IPX providers and the PMN agreed to have application specific routing at the edge so avoiding it between PMNs.

The interconnection with other PMNs is done in either transit mode through IPX providers or in multi-lateral service hub, as defined in AA.51 [50].

The Extended NAPTR [26] can be used at the IPX Diameter Agent to find the application specific Edge proxy.

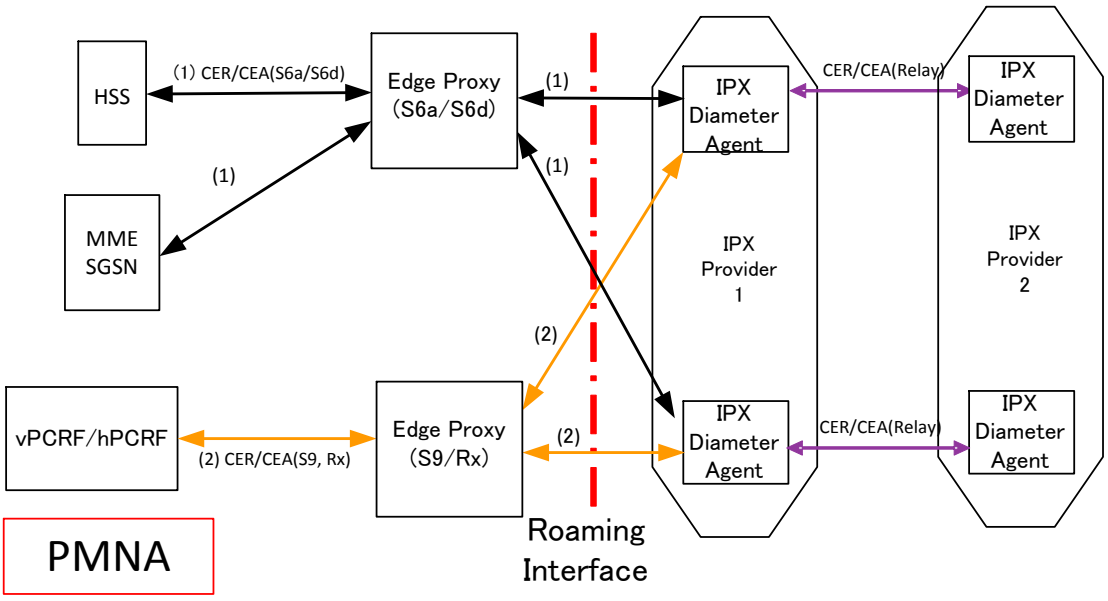

Figure B-5: Diameter architecture example 5

Figure B-6 illustrates the case where the PMN has outsourced DEAs to its IPX providers through the IPX Diameter Agent.

The interconnection with other PMNs is done in transit mode through IPX providers or in multi-lateral service hub, as defined in AA.51 [50].

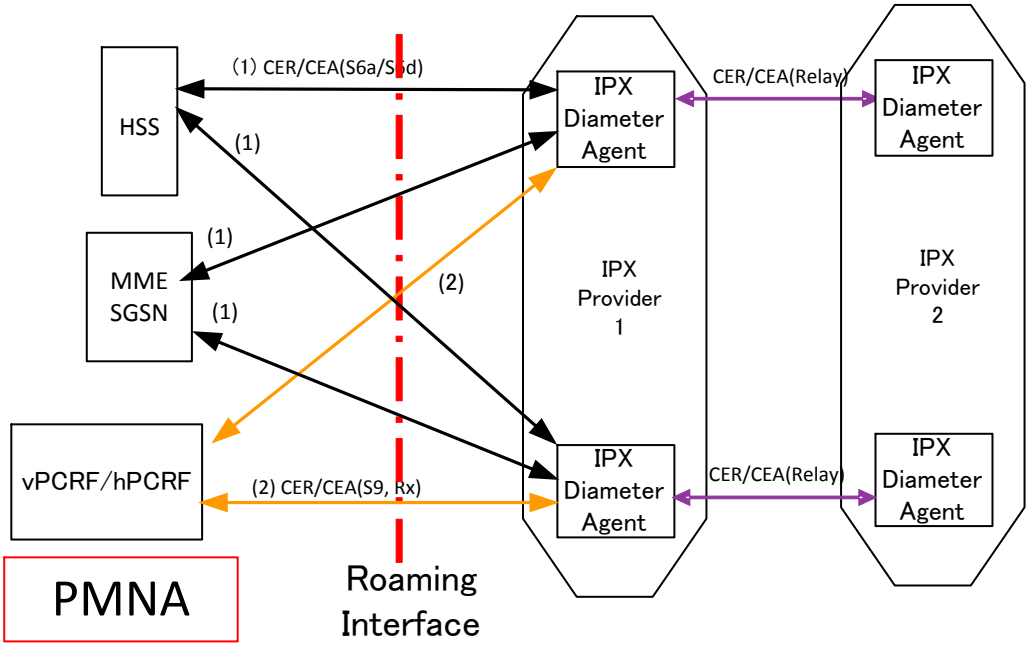

Figure B-6: Diameter architecture example 6

Annex C Background on Security Requirements

This annex provides some background information and justification for the security requirements of Section 6.5.

The need for Diameter Security

Diameter IETF RFC 3588 [3] requires a TLS or IPSec tunnel at the network/transport layer starting from a Diameter agent and terminating at the Diameter peer in order to ensure authentication, data integrity and confidentiality (referred to as "*peer-to-peer*" security). In an "Internet Scenario" this setting is possible. However, in international roaming, secure tunnels are handled by SEGs and not by Diameter Agents. As a consequence there is no "peer-to-peer" security.

When a TLS or IPSec tunnel is setup each agent has authenticated itself towards the peer while data integrity and confidentiality is guaranteed over the entire network. In international roaming these assumptions are not true:

- Authentication is performed by SEGs and not by Diameter Agents. Consequently, a Diameter Agent establishes a "trusted" relationship with a peer during exchange capabilities process involving CER/CEA messages but it has no way to authenticate it. This point becomes even more crucial when dynamic peer discovery is used.
- Diameter packets are not natively protected by encryption and integrity checks. This is acceptable for PMN-inner traffic because this network is trusted, Traffic to/from outer networks requires protection, in contrast.

As a consequence, a PMN is exposed to several fraud/attack vulnerabilities if the countermeasures described in section 6.5.2 are not applied.

DNS Security

The use of dynamic discovery for DEA peers raises several security issues related to DNS vulnerabilities/attacks mainly when a GRX/IPX DNS, outer to a PMN, is used. The approach is only as good as the security of the DNS queries along the way. At least two critical attacks to DNS infrastructure can be cited:

- An amplification and/or reflection attack can overload (DoS) a victim DEA with a huge number of unsolicited DNS answers.
- DNS Poisoning attack corrupts the association name/IP (i.e. Kaminsky attack). Once corrupted, the entry persists for a long time (TTL value). The result is that the DEA's routing table is improperly altered.

So, from a security perspective it is recommended to use static entries; to simplify network configuration management within a PMN, a centralized Diameter Redirect Agent (DRD, IETF RFC 3588 [3]) can be used. In this case, peer and routing table entries can be configured just once.

Annex D IPsec to protect IP transport

IPSec can be used on interfaces that use the Diameter protocol to protect its transport if no other appropriate security mean is in place. The use of IPSec between service providers or between service providers and IPX service hubs is based on bilateral agreement between those parties. This applies to both GRX and IPX.

LTE roaming adds Diameter as a new signalling protocol to the inter-operator interface. 3GPP TS 29.272 [8] specifies in section 7.1.2 that Diameter messages are secured by 3GPP TS 33.210 [37] Network Domain Security for IP (NDS/IP). NDS/IP specifies the use of IPsec Security Gateways (SEG) for interconnecting different Security Domains (for example operators A and B):

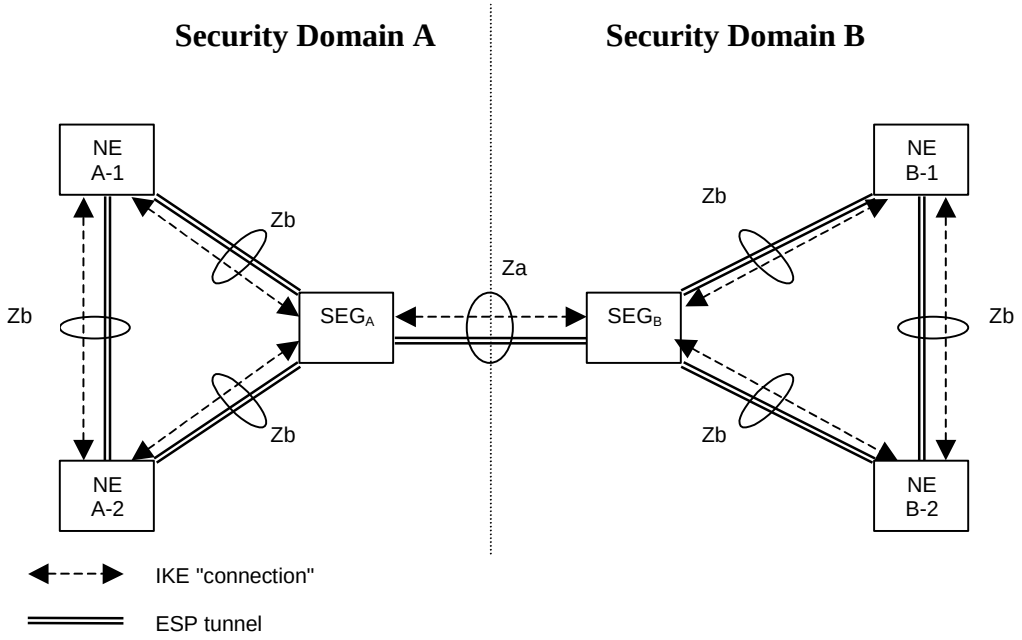

Figure D-1: NDS/IP Architecture

The inter-domain Za interface consists of two parts: the IPsec Encapsulating Security Payloads (ESP) tunnel that carries the actual Diameter traffic, and the Internet Key Exchange (IKE) connection which is used to establish the IPsec ESP tunnel between the two Security Domains. 3GPP TS 33.210 [37] defines which versions of the protocols should be used. The use of IKE with pre-shared keys is also standardised in 3GPP TS 33.210 [37]

When two PMNs establish an LTE Roaming Agreement, they may also agree the properties of the Za interface, and the pre-shared key that authenticates this specific connection.

Alternatively, two PMNs may also agree to use certificates for mutual SEG authentication. The use of IKE with certificates is standardised in 3GPP TS 33.310 [38]. Both authentication methods (pre-shared keys and certificates) may coexist in parallel. If certificates are used, it is recommended to use certificates signed by a recognized signing authority (CA) and to adopt a mechanism to verify their validity.

NOTE: IP addresses and certificates of the SEGs may be published in IR.21 [40], but a pre-shared key needs to be kept secret between each two roaming partners.

Annex E: Document Management

Document History

Version	Date	Brief Description of Change	Approval Authority	Editor / Company
0.0.20	7 Aug 2009	Initial version input for RILTE #3		
0.0.22	21 Aug 2009	Baseline version following RILTE #3		
0.0.24	24 Sept 2009	Baseline version following RILTE #4		
0.0.26	12 Oct 2009	Consolidation of RILTE #4 Action Points and subsequent emails		
0.0.28	20 Oct 2009	Version for review at RILTE #5		
1.0	28 Oct 2009	Approved at RILTE #5, for submission to IREG #57	IREG #57	John Boggis, Vodafone
2.0	1 June 2010	Major restructure and addition of some new sections	IREG#58 EMC#84	John Boggis, Vodafone
3.0	21 October 2010	Inclusion of the following CRs: MCR 002: 2G/3G and LTE Co-existence Scenarios MCR 003: Document the roaming retry procedure for CSFB MCR 004: Diameter Roaming Architecture MCR 005: PMIP-GTP Interworking MCR 006: Gateway Selection in SGSN MCR 007: VoLTE Roaming Architecture Additions	IREG #59 DAG #77 EMC #89	Nick Russell, Vodafone
3.1	17 February 2011	Inclusion of mCR 008: LTE Voice Roaming Architecture	Packet #48	Nick Russell, Vodafone
4.0	21 March 2011	Inclusion of the following CRs: MCR 009: IP addressing alignment mCR 010: Clarification on IMS APN usage	Packet #48 IREG #60 DAG #79	Nick Russell, Vodafone
5.0	18 May 2011	Change of Editor, section numbering correction on 'Document Management' and Inclusion of the following CRs: MCR 011: IMS APN and IMS Emergency call MCR 013: Addition of details from the IPv6 EMC Task Force's Ipv6 Transition Whitepaper MCR 014: IMS "well-known" APN as Default APN	Packet #50 IREG #60 DAG #81	Itsuma Tanaka, NTT DOCOMO
6.0	31 August 2011	Inclusion of the following CRs: MCR012: Policy and Charging mCR015: Correcting inconsistencies MCR 016: PDN/PDP Type of IPv4v6 Editorial changes by the editor to update numbering of figures and some references quoted in the text.	Packet #52 IREG #60 DAG#84	Itsuma Tanaka, NTT DOCOMO
7.0	31 January	Inclusion of MCR017r3: Gateway selection	Packet#54	Itsuma Tanaka,

Version	Date	Brief Description of Change	Approval Authority	Editor / Company
	2012	for IMS APN	IREG#60 DAG#88	NTT DOCOMO
8.0	31 May 2012	Inclusion of the following CRs: MCR 018: Diameter security for LTE roaming MCR 019: GTP Firewalls MCR 020: Not mandating support for UE initiated bearer requests: MCR 021: Access Control in VPMN for CS Fallback MCR 022: IMEI notification from VPLMN to HPLMN MCR023: Disconnect connection to IMS APN MCR024: Implementing decision on HTTP/XCAP use MCR025: General Cleanup ofLTE Data Roaming Guideline MCR026: Support of SGs Interface mCR027: Inter-RAT Handover requirements	Packet#54, #55, #56 IREG#62 DAG#92	Itsuma Tanaka, NTT DOCOMO
9.0	29 November 2012	Inclusion of the following CRs: MCR028: Support of S4 SGSN and Gn/Gp SGSN in EPC MCR029: Default APN Guideline MCR030: Technical Requirements for static and dynamic QoS support for LTE MCR031: Introduction of MT Roaming Forwarding scenario 1	Packet#58, #59, #60, #61 IREG#63 DAG#99	Itsuma Tanaka, NTT DOCOMO
10.0	10 July 2013	Inclusion of the following CRs: CR1001: Addition of a new Diameter error cause for a better access control in the VPMN CR1002: Co-existence of Gr and S6d interfaces CR1003: Entire Document Review by SIGSG CR1004: Disconnection and reactivation of the PDN connection to the IMS APN CR1005: QoS for Diameter CR1006: Consequences of the single APN scenario CR1007: Security for LTE Roaming CR1008: Network Layer and Transport Layer Filters CR1009: IMS APN not as APN for XCAP (Ut) CR1010: CSFB IREG Test CR1011: Inter-RAT Pingpong avoidance CR1012: Guidance regarding the APN approach when roaming PRD editor has performed the following tasks:	Packet#62, #63, #64 IREG#64 DAG#104	Itsuma Tanaka, NTT DOCOMO

Version	Date	Brief Description of Change	Approval Authority	Editor / Company
		Correction of PRD title (as agreed in MCR028) Editorial changes (Font face and size, removal of hyperlinks, review of Latin terms, correction of wrong reference numbering)		
11.0	16 December 2013	Inclusion of the following CRs: CR1013: IMS APN on 2G and 3G Access CR1014: Diameter over IPX CR1015: QoS and roaming agreements CR1016: Bandwidth considerations for Inter-RAT HO CR1017: Signalling indication set by HSS in case of IMS APN CR1019: T-ADS for roaming subscribers PRD editor has performed the following tasks: Editorial changes (Font face and size, removal of hyperlinks, removal/correction of wrong auto-numbering)	Packet#65 , #66, #67, #68 IREG#65 DAG#	Itsuma Tanaka, NTT DOCOMO
12.0	1 December 2014	Inclusion of the following CRs: IR.88 CR1018 Reject Cause for CSFB UEs without 2G3G Roaming Agreement IR.88 CR1021 Further clarification for default APN – revisited IR.88 CR1022 DIAMETER Security Updates IR.88 CR1023 Updating IREG Test references in Annex A IR.88 CR1024 2G, 3G and LTE roaming agreements and LBO IR.88 CR1025 DIAMETER Security Updates IR.88 CR1026 PS and EPS Context-ID alignment IR.88 CR1027 Implementation of outcome of the White Paper on 'APN for XCAPIMAPHTTP traffic' Editorial changes by PRD editor	Packet #69, #70, #71, #72, #73, #74, #75 IREG #66 IREG #67	Itsuma Tanaka (NTT Docomo, Inc.) Ralf Keller (Ericsson) Cédric Bonnet (Orange) Catherine Livet (Tata Communications Services (Bermuda) Limited) Nick Russell (BlackBerry Limited)
13.0	20 May 2015	Inclusion of the following CRs: IR.88 CR1029 Definition of Hubbing Architecture for LTE IR.88 CR1030 Clarifications on QoS Bearer Management and CSFB Support IR.88 CR1031 IMS APN behavior clarification when no IMS agreement IR.88 CR1032 Clarification of DNS records for 2G, 3G and LTE Roaming Agreement Scenarios IR.88 CR1033 Alignment to IR 33 VPMN identification for end user billing shall be based on MCC-MNC	Packet #76, #77, #78, #79, NG #1	Mihaela Ambrozie (Vodafone Roaming Services S.à r.l) Sajid Soormally (Alcatel Lucent) Cédric Bonnet (Orange) Gert Oster (Ericsson) Merieme El Orch (Orange)

Version	Date	Brief Description of Change	Approval Authority	Editor / Company
		IR.88 CR1034 building origin destination host name and realm in consensus with topology hiding Editorial changes by PRD editor		Stefan Dalluege (Vodafone GmbH)
13.1	26 May 2015	Late inclusion of IR.88 CR1028 Data Off and unsolicited downlink IP packets Editorial changes by PRD editor	NG #1	Ralf Keller (Ericsson) Cédric Bonnet (Orange)

Other Information

Type	Description
Document Owner	Networks / Packet
Editor / Company	Cédric Bonnet / Orange

It is our intention to provide a quality product for your use. If you find any errors or omissions, please contact us with your comments. You may notify us at prd@gsma.com

Your comments or suggestions & questions are always welcome.