

MIoT Location in Roaming
Version 1.0
20 May 2020

This is a Non-binding Permanent Reference Document of the GSMA

Security Classification: Non-confidential

Access to and distribution of this document is restricted to the persons permitted by the security classification. This document is confidential to the Association and is subject to copyright protection. This document is to be used only for the purposes for which it has been supplied and information contained in it must not be disclosed or in any other way made available, in whole or in part, to persons other than those permitted under the security classification without the prior written approval of the Association.

Copyright Notice

Copyright © 2020 GSM Association

Disclaimer

The GSM Association ("Association") makes no representation, warranty or undertaking (express or implied) with respect to and does not accept any responsibility for, and hereby disclaims liability for the accuracy or completeness or timeliness of the information contained in this document. The information contained in this document may be subject to change without prior notice.

Antitrust Notice

The information contain herein is in full compliance with the GSM Association's antitrust compliance policy.

Table of Contents

1 Introduction 4
1.1 Overview 4
1.2 Scope 4
1.3 Definitions 4
1.4 Abbreviations 5
1.5 References 7
2 Requirements 8
2.1 Location technologies 8
2.2 Location requirements 9
3 Use cases 9
3.1 Device journey 9
3.2 Device reachability 10
4 Device Location technology 10
4.1 Satellite (GNSS) 10
4.2 Cell-Id 11
5 Network Location technology 11
5.1 Location definition 11
5.2 2/3/4G location architecture 11
5.3 5G location architecture 12
5.4 Location procedures 13
5.5 Positioning methods 14
6 4G network location 16
6.1 Overview 16
6.2 4G scenario 17
6.2.1 4G / Cell-Id 17
6.2.2 4G / Cell geographical coordinates 17
6.2.3 4G / Object geographical coordinate 18
7 5G networks location 18
7.1 Overview 18
7.2 5G scenario 19
8 Conclusions 20
9 Further studies 20
Annex A Location parameters 21
A.1 Cell definition 21
A.1.1 CGI 21
A.1.2 ECGI 21
A.1.3 NR CGI 22
A.2 Location Information parameters 22
A.2.1 GeographicalInformation 22
A.2.2 GeodeticInformation 24
A.2.3 AgeOfLocationInformation 24
A.2.4 LocationInformation 25

A.2.5 LocationInformationGPRS 25
A.2.6 LocationInformationEPS 26
A.2.7 LocationInformation5GS 26
Annex B Location procedure 27
B.1 Circuit Switch (CS) MT-LR procedure (2/3G) 27
B.2 Evolved packet Core (EPC) MT-LR procedure (4G) 28
B.3 5GC MT-LR procedure (5G) 29
B.4 Deferred 5GC MT-LR procedure (5G) 30
Annex C Location interfaces 31
C.1 4G - S6a / S6d 31
C.1.1 Insert-Subscriber-Data-Request (IDR) Command 31
C.1.2 Insert-Subscriber-Data-Answer (IDA) Command 32
C.2 4G - SLg interface 33
C.2.1 Provide-Location-Request (PLR) Command 33
C.2.2 Provide-Location-Answer (PLA) Command 34
C.3 5G – Namf_ Location_ProvideLocationInfo service operation 35
C.4 5G - Namf_ Location_ProvidePositioningInfo service operation 36
Annex D Document Management 37
D.1 Document History 37
D.2 Other Information 37

1 Introduction

1.1 Overview

This white paper describes the MIoT (Mobile Internet of Things) location in roaming using different network based technologies which are complementing the device based technologies like Global Navigation Satellite System (GNSS) such as the Global Positioning System (GPS).

The background for this PRD is the existence of a clear business that needs for the accurate location of various MIoT objects, whether those are in the home network or roaming. For example, the package delivery across borders with an embedded NB-IoT/LTE-M chip, could provide customers (almost) real-time information on where it is located, in case the location information is available to the home operator by the visited operator(s). Unfortunately, this is not the case at the moment. Therefore, it would be beneficial to have a document which illustrates the issues and provides feedback on the technical solutions available to solve this problem. This information can then be used by strategic/commercial people within GSMA to decide how the industry should tackle the issue in the real world.

1.2 Scope

The scope of this document is to describe:

- Location requirements for MIoT, specifically without GNSS capabilities
- Use case for location retrieval by the network
- Location technologies from the device and network perspective
- Implementation on 4G and 5G networks

1.3 Definitions

Term	Description
M2M	Machine-to-Machine, a general term referring to any network technology allowing devices to communicate with each other. For example, two industrial robots connected to each other via Ethernet in a factory, is part of M2M but not MIoT.
MIoT	Mobile Internet of Things, a GSMA term which refers to the 3GPP standardised LPWA technologies using the licenced band (aka LTE-M, NB-IoT and EC-GSM-IoT, Extended Coverage GSM for Internet of Things). In 3GPP Release 13 and upwards, the Category of UEs that support power consumption optimisations, extended coverage and lower complexity are part of MIoT (CAT M1, CAT NB1 from Release 13 and CAT M2, CAT NB2 from Release 14). As this particular term is widely used throughout the GSMA, it is also utilized also in this document. Not to be confused with the term “MIoT” which means 5G Massive IoT in 3GPP terminology.
Roaming	GSMA PRD BA.40 [2] states that roaming is defined as the ability for wireless customers to automatically make and receive voice calls, send and receive data, or access other services when travelling outside the geographical coverage area of their own home network, by means of using a visited network

1.4 Abbreviations

Term	Description
3GPP	3rd Generation Partnership Project
A-GNSS	Assisted- Global Navigation Satellite System
AMF	Access and Mobility Management Function (5G)
CGI	Cell Global Identifier
CN	Core Network
CI	Cell Identity
CS	Circuit Switch
DB	Data Base
ECI	EUTRAN Cell Identifier
E-CID	Enhanced Cell ID Method
ECGI	E-UTRAN Cell Global Identifier
EPC	Evolved Packet Core
EPS	Evolved Packet System
EUTRAN	Evolved UMTS Terrestrial Radio Access Network
GMLC	Gateway Mobile Location Centre
GNSS	Global Navigation Satellite System
GPS	Global Positioning System
GPRS	General Packet Radio Service
GSM	Global System for Mobile Communications
GSMA	GSM Association
GTP	GPRS Tunnelling Protocol
HLR	Home Location Register
HPLMN	Home Public Land Mobile Network
HSS	Home Subscriber Server
HTTPS	Hypertext Transfer Protocol Secure
IDA	Insert Subscriber Data Answer
IDR	Insert Subscriber Data Request
IMSI	International Mobile Subscriber Identity
IP	Internet Protocol
IoT	Internet of Things
IWF	Interworking Function
IWK-SCEF	Interworking-SCEF
LBS	Location Base Service
LAC	Location Area Code
LCS	Location Service
LMF	Location Management Function (5G)
LPWA	Low Power Wide Area

Term	Description
LRF	Location Retrieval Function
LS	Location Server (SMLF / LMF)
LTE	Long Term Evolution
LTE-M	a.k.a. LTE MTC Cat M1, Long Term Evolution Machine Type Communication Category M1, but also including further Categories like Category M2.
LMU	Location Measurement Unit
M2M	Machine to Machine
MAP	Mobile Application Part
MCC	Mobile Country Code
MSC	Mobile Switch Centre
MIoT	Mobile IoT
MME	Mobility Management Entity
MSISDN	Mobile Station International ISDN Number
MT-LR	Mobile Terminated Location Request
MTC	Machine Type Communications
MSC	Mobile Switching Centre
NAS	Non-Access Stratum
NAT	Network Address Translation
NB-IoT	Narrowband IoT
NEF	Network Exposure Function (5G)
NF	Network Function
NI-LR	Network Induced Location Request
NPLI	Network Provided Location Information
NR	New Radio
NR CGI	New Radio Cell Global Identifier
OTDOA	downlink Observed Time Difference Of Arrival
OTT	Over The Top
PLMN	Public Land Mobile Network
OTT	Over The Top
PEI	Permanent Equipment Identity
PLA	Provide Location Answer
PLR	Provide Location Request
PMN	Public Mobile Network
PS	Packet Switch
PSM	Power Save Mode
RAT	Radio Access Technology
SCEF	Service Capability Exposure Function
SGSN	GPRS Support Node

Term	Description
SIM	Subscriber Identification Module
SMS-SC	Short Message Service-Service Centre
SMLC	Serving Mobile Location Centre
SMS	Short Message Service
SMSC	Short Message Service Centre
SUPI	Subscription Permanent Identifier
TCP	Transmission Control Protocol
UDM	Unified Data Management
UE	User Equipment
ULI IE	Uplink Information Extraction
U-TDOA	Uplink-Time Difference Of Arrival
VPLMN	Visited Public Land Mobile Network

1.5 References

Ref	Doc Number	Title
1	3GPP TS 29.002	Mobile Application Part (MAP) specification
2	3GPP TS 23.032	Universal Geographical Area Description (GAD)
3	3GPP TS 23.271	Location Services (LCS); Functional description (2/3/4G)
4	3GPP TS 29.172	Location Services (LCS); Evolved Packet Core (EPC) LCS Protocol (ELP) between the Gateway Mobile Location Centre (GMLC) and the Mobile Management Entity (MME); SLg interface
5	3GPP TS 29.272	Evolved Packet System; MME and SGSN Related Interfaces Based on Diameter Protocol
6	3GPP TS 29.274	Tunnelling Protocol for Control plane (GTPv2-C); Stage 3
7	3GPP TS 38.413	NG-RAN; NG Application Protocol (NGAP)
8	3GPP TS 23.273	5G System (5GS) Location Services (LCS)
9	3GPP TS 36.305	Functional specification of User Equipment (UE) positioning in E-UTRAN; Stage 2
10	3GPP TS 38.305	Functional specification of User Equipment (UE) positioning in NG-RAN; Stage 2
11	3GPP TS29.518	5G System; Access and Mobility Management Services, stage3 (Namf_Location Service)
12	3GPP TS 29.572	5G System; Location Management Services; Stage 3 (Nlmf_Location)

2 Requirements

2.1 Location technologies

The picture hereafter describes different alternatives in order to locate different devices.

They are complementary solutions, maximising accuracy for GNSS (Global Navigation Satellite System) and minimising power consumption and device cost for the network solutions.

The first set of location technologies is based on the device which could use:

- a GNSS component (able to retrieve geographical coordinates) using satellite systems and provide such location to a location server. It provides very high accuracy but also requires a lot of high energy and it has a high device cost aspect.
- the mobile network information like cells (current and optionally adjacent cells) to provide location information (Cell-Id) to a location server.

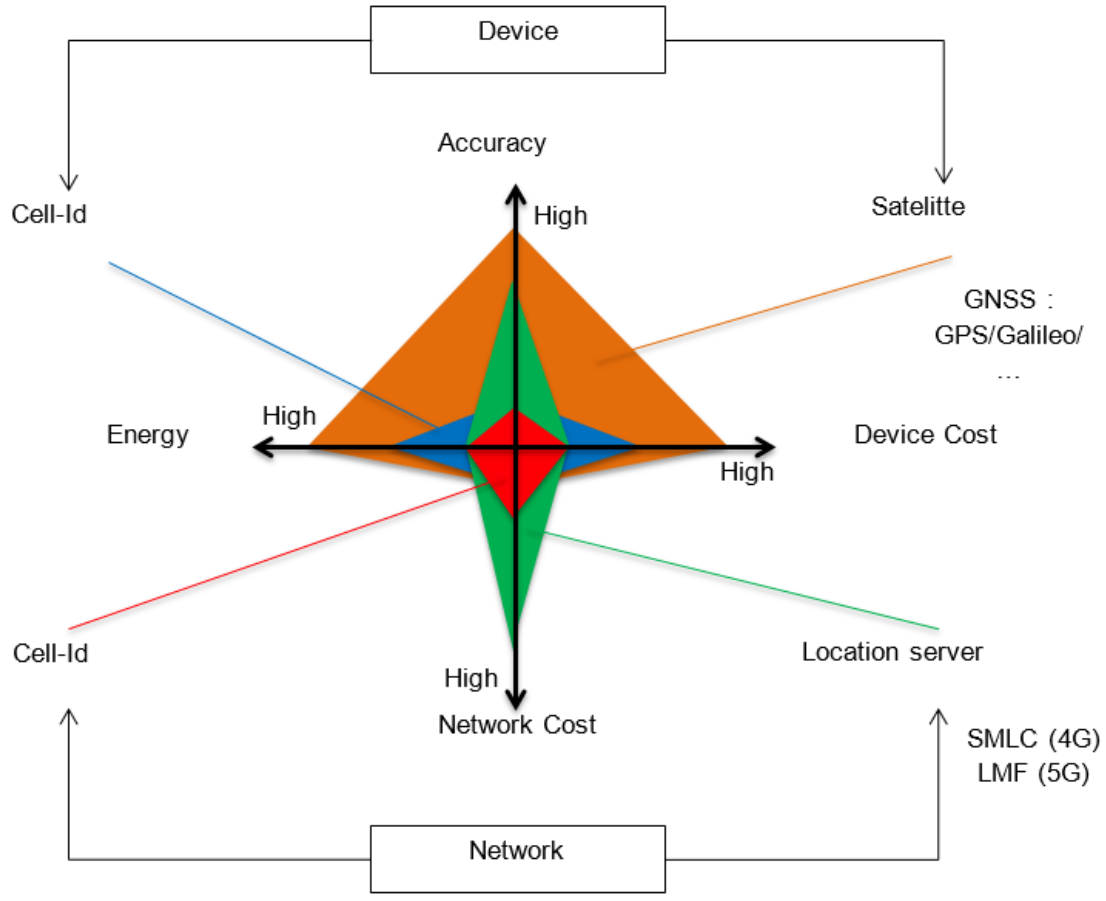

Figure 1 Location technology

The second set of location technologies are based on the mobile network which could use:

- the mobile network information like cells to provide location information (Cell-Id) to a location server (and optionally geographical coordinates of the cell)

- a location server Serving Mobile Location Centre (SMLC) or Location Management Function (LMF) able to retrieve geographical coordinates and provide such location to a location server – Gateway Mobile Location Centre (GMLC)

2.2 Location requirements

For Long Term Evolution M1 (LTE-M) and Narrow Band Internet of Things (NB-IoT), 4G techniques could be used to retrieve the Cell-Id and the geographical coordinates via the network. Those solutions could be enhanced in the 5G context, but this initial approach will start focusing on 4G solutions.

The network solution using signalling has the following advantages:

- No need for a Global Positioning System (GPS) chipset in the device (GPS or application in the Subscriber Identification Module (SIM).
- Low energy consumption because the location is provided by the network (no data connection or Short Message Service (SMS) is required).
- Location available permanently even if the device is not reachable (last known location by the network).

Based on the network initiative, some updated location requirements could be proposed:

- Rq#1: the device shall consume very low energy (10 years of energy autonomy).
- Rq#2: the device shall minimize data/SMS services while roaming in order to minimize cost to provide the location.
- Rq#3: The network location should be available even if the device is not reachable.

3 Use cases

3.1 Device journey

Devices are moving around the world, and different conditions could be foreseen during the journey. Device and Network location technologies are a complementary one during the journey.

Geographical conditions

For indoor coverage, the network solution should be the unique way to locate the device, while GNSS and the Network solution could be applicable for outdoor coverage.

Timing conditions

For some applications, it is only requested to have an accurate location at the reception of a package (using GNSS) while during the journey. Only low/medium accuracy is requested when using the network solutions.

3.2 Device reachability

In order to save battery, the devices are not always directly reachable (due to Power Save Mode for example). If the device is not reachable, it will be difficult for the network to locate the device.

The figure hereafter describes the relationship between the geographical accuracy, the Power Save Mode period and the speed of the object: a high accuracy needs a lot of energy, while a lower accuracy could save power.

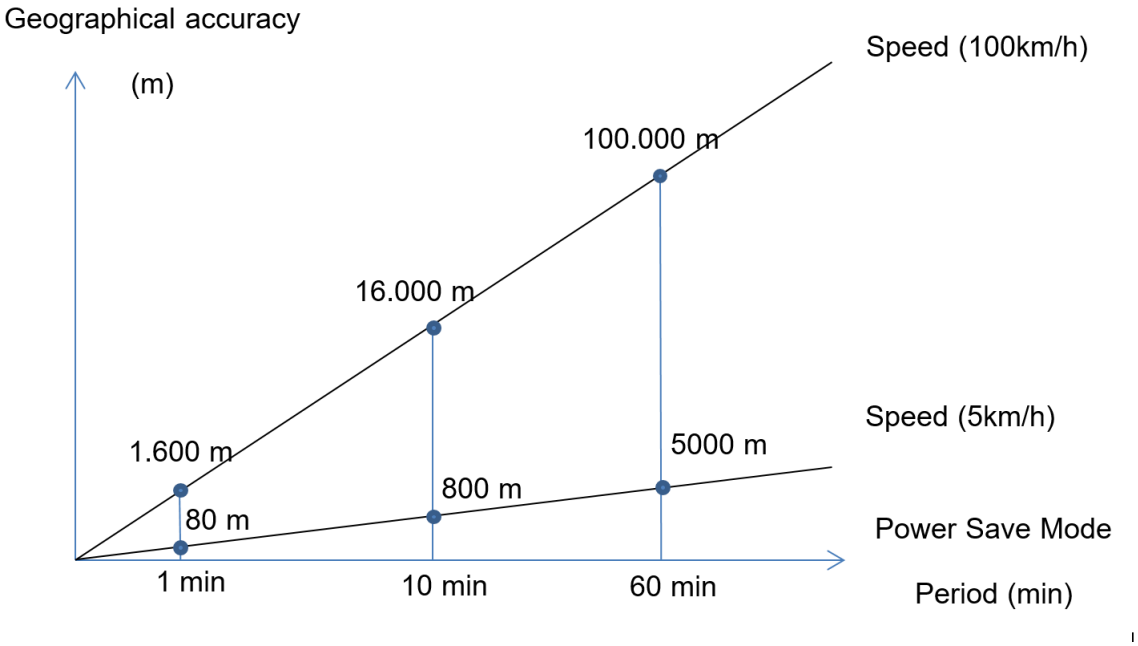

Figure 2 Geographical accuracy

As an example, if the average speed of an object is 5 km/h, and if the Power Save Mode (PSM) period is 10 minutes, then the object has potentially moved 800m during this time. This is important to know as it will have an impact on the geographical accuracy requirements.

4 Device Location technology

Several technologies are available on the device to enable the object location:

- The device GNSS component will provide the geographical information (latitude, longitude) to a location server
- The device will provide the Cell-id of the mobile network to a location server

4.1 Satellite (GNSS)

The most popular one is based on satellite called Global Navigation Satellite System - GNSS (GPS, Galileo, …).

The location of an object could be retrieved by asking the device to turn on the GNSS component, and provide back the geographical information (latitude and longitude). It is based on satellite signal observation and it provides a very high accuracy (5-30m).

It requires a lot of energy and has a high device cost aspect. Additionally, the GNSS solution is not available in indoor conditions (no satellite visibility). Some mobile networks usages are also required to carry such GNSS information to the location servers managing objects.

4.2 Cell-Id

Instead of using the satellite signals, the device could also capture the mobile network signals and provide the location information (current Cell-Id and optionally adjacent cells) to a location server.

This solution does not require any GNSS component, but accuracy is low (a little bit better than pure cell-id, due to adjacent cells knowledge).

A major issue is related to the translation of the cell-id into the geographical information (latitude, longitude). An External Database is required, using the Over the Top (OTT) information.

5 Network Location technology

5.1 Location definition

The location provided by the network could be:

- Cell identity (see Annex A.1)
- Geographical Information (Latitude, Longitude, Uncertainty code) (see Annex A.2)

The cells are identified in a different way according to the network technologies:

- 2/3G: Global System for Mobile communications (GSM) cellGlobalId (CGI)
- 4G: Evolved UMTS Terrestrial Radio Access Network (EUTRAN) e-utranCellGlobalIdentity – (ECGI)
- 5G: New Radio (NR) nrCellGlobalIdentity – (NR-CGI)

If the User Equipment (UE) is unavailable, it is important to note that the network will provide the time elapsed since the last radio contact of the location and the latest known Cell-Id.

5.2 2/3/4G location architecture

The picture hereafter (3GPP TS 23.271 [3]) describes the different 2/3/4G network architecture to provide the network location, mainly based on cell-id but also enhanced to the geographical coordinates.

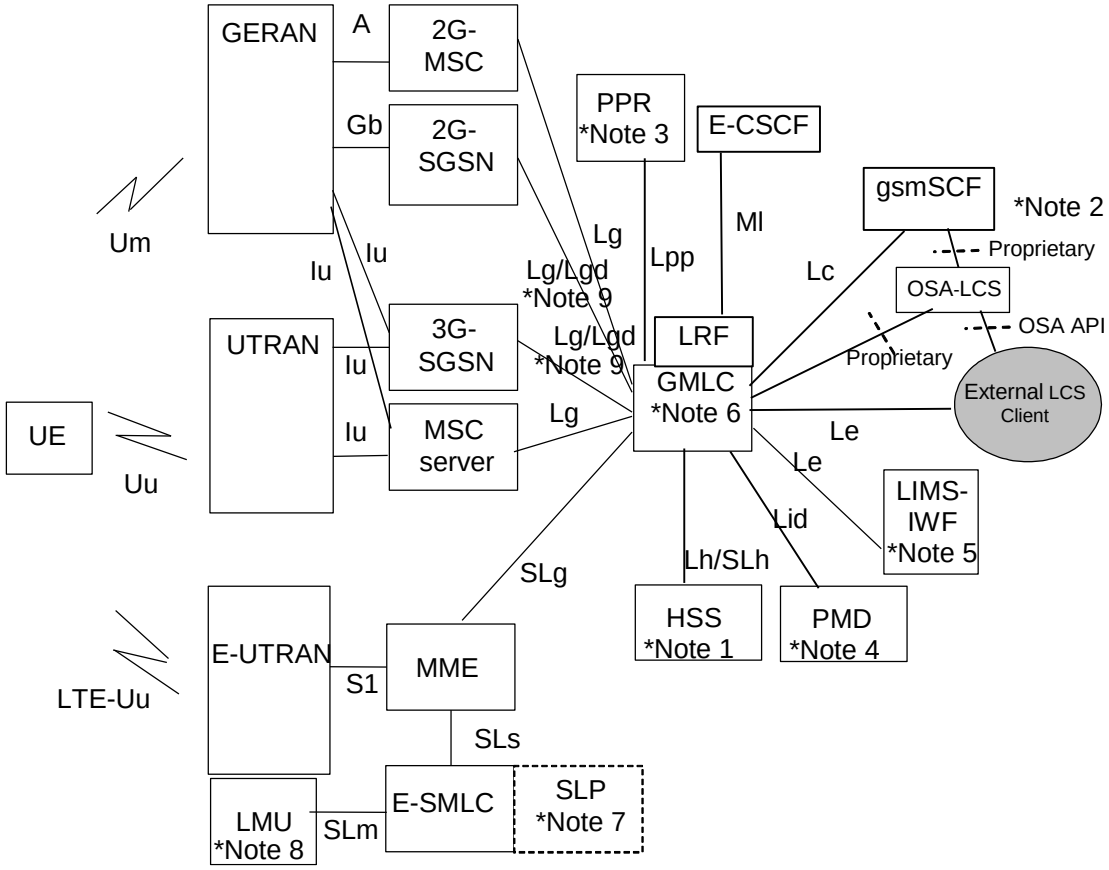

Figure 3 Location network architecture

The Gateway Mobile Location Centre (GMLC) is able to interrogate different access nodes located in the visited network by using the adequate interfaces and retrieve:

- The basic cell location provided by the core network Mobile Switching Centre/GPRS Support Node/Mobility management Entity (MSC/SGSN/MME) and optionally the geographical coordinates of the cell.
- The geographical coordinates of the object provided by an advanced location server, the Serving Mobile Location Centre (SMLC)

5.3 5G location architecture

The figure hereafter (3GPP TS23.273 [8]) describes the 5G location architecture.

The 5G architecture reuses the GMLC concept and adds a new core network managing the location inside the 5G specific component and retrieve:

- The basic cell location provided by the core network Access and Mobility Management Function (AMF) and optionally the geographical coordinates of the cell
- The geographical coordinates of the object provided by an advanced location server (LMF).

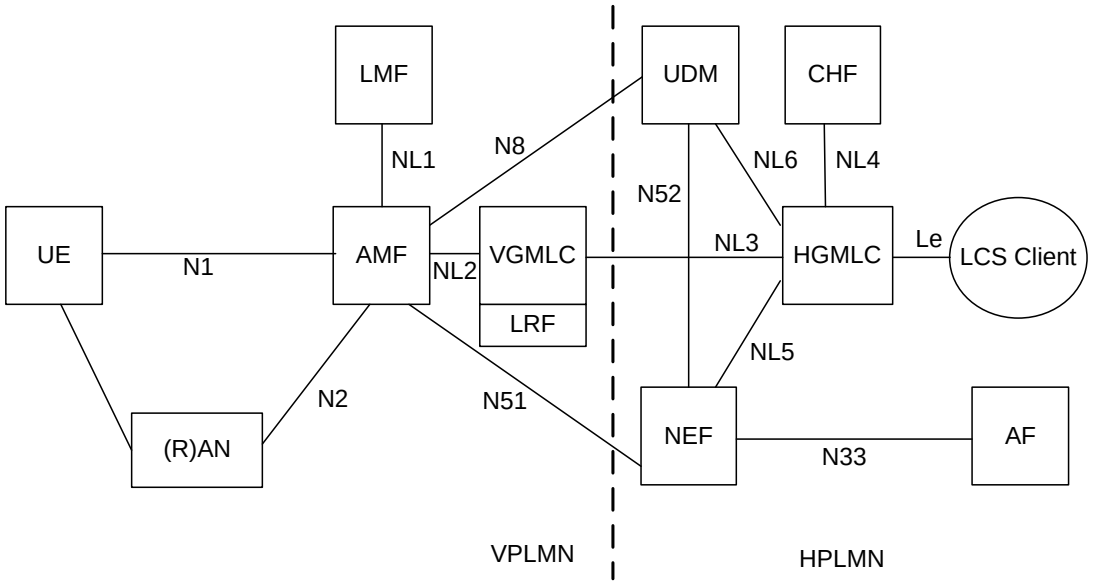

Figure 4 5G Location network architecture

5.4 Location procedures

The Location Service (LCS) procedures could be used to retrieve the location from the 2/3/4/5G networks (see annex B for more details).

In order to retrieve the object location, Mobile Terminated Location Request (MT-LR) will be used, including potentially privacy checking.

For MT-LR Location Request, when a LCS service request is received at the 5GC GMLC, the target UE may be served by either 5G Core (5GC) or Evolved packet Core (EPC). An EPC/5GC common interface is used between the LCS Client and the 5GC GMLC: this common interface enables the location service request being handled based on whether the target UE is, served by EPC or 5GC. The AF initiates the service request to the 5GC GMLC via the Network Exposure Function (NEF).

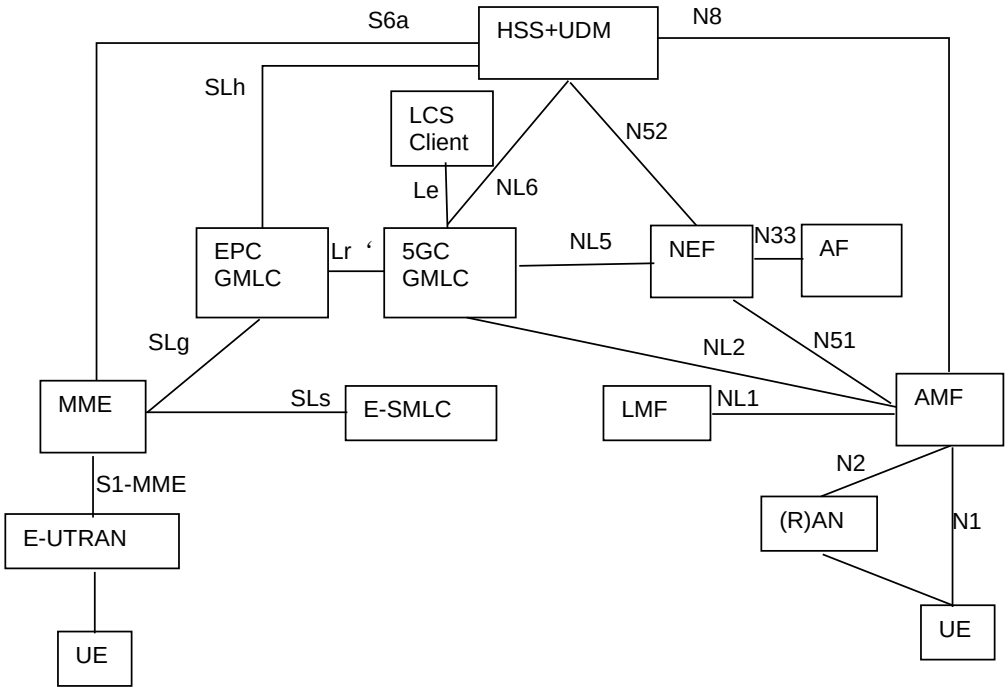

Figure 5 4/5G Location network architecture

5.5 Positioning methods

The location architecture enables different positioning methods:

- Basic Cell Id is enabled by the Core network nodes (MSC/SGSN/MME/AMF) and optionally by the geographical coordinates of the cell
- Enhanced positioning methods are enabled by specific location servers (SMLC/LMF): Positioning the UE involves two main steps: signal measurements and the position estimation, also velocity computation based on the measurements could be optional.

The 4G standard positioning methods (described in 3GPP TS 36.305 [9]) supported are:

- Network-assisted **GNSS** methods;Assisted- Global Navigation Satellite System (A-GNSS): The use of UEs that are equipped with radio receivers capable of receiving GNSS signals
- **Downlink** positioning Downlink Observed Time Difference Of Arrival (O-TDOA): The UE position is estimated based on the measurements of downlink radio signals from multiple Transmission Points taken at the UE, along with the knowledge of the geographical coordinates of the measured Transmission Points and their relative downlink timing.
- **Enhanced** Cell ID method (E-CID): The UE position is estimated with the knowledge of the geographical coordinates of its serving eNodeB. Enhanced Cell ID positioning refers to those techniques which use an additional UE and/or E UTRAN radio resource related measurements, to improve the UE location estimate that is based on Timing Advance (TA) and/or Neighbour Cell (and Rx level) and/or Angle of Arrival (AoA) measurements.

- **Uplink** positioning Uplink-Time Difference Of Arrival (U-TDOA): The UE position is estimated, based on the timing measurements of the uplink radio signals taken at different Location Measurement Unit (LMUs), along with the knowledge of the geographical coordinates of the LMUs. The time required for a signal to be transmitted by a UE to reach a LMU is proportional to the length of the transmission path between the UE and the LMU.

The table hereafter describes the impacts of different positioning methods:

Method	UE-based	UE-assisted	eNB- assisted	3GPP release
A-GNSS	Yes Measurements: UE Estimation: UE	Yes Measurements: UE Estimation: LS	No	Rel-9
Downlink (O-TDOA)	No	Yes Measurements: UE Estimation: LS	No	Rel-9
Enhanced Cell-Id (E-CID)	No	Yes Measurements: UE Estimation: LS	Yes Measurements: eNB Estimation: LS	Rel-9
Uplink (U-TDOA)	No	No	Yes Measurements: eNB Estimation: LS	Rel-11

Similar positioning methods are also defined for 5G (described in 3GPP TS 38.305 [10]).

Positioning accuracy depends on the different positioning methods and the table hereafter provides an overview of the expected accuracy.

Positioning methods	Characteristics	Accuracy
Cell-ID	Use basic Cell ID info from the network	100m-3km
E-CID + TA	Combines Cell ID with Timing Advance	500m
E-CID + AOA	Mobile measures angle of Arrival	100-200m
Downlink (O-TDOA)	Mobile measures downlink Timing Difference	50-200m
Uplink (U-TDOA)	Mobile measures uplink Timing Difference	<50m
GPS/Assisted GPS	Use GPS Receivers in Device/Network	5-30m

The positioning accuracy depends also a lot on the cellular design: accuracy in rural areas is lower than in urban areas due the cell density (5G cell density in most cases should be higher than in 4G).

6 4G network location

6.1 Overview

All the 4G options proposed into this document are based on information exchanged with a Diameter signalling protocol, between the home and the visited network. The home network (via the Gateway Location Centre – GMLC) is able to retrieve the Cell-Id by sending a Diameter message to the visited network. The MME of the visited network is answering to this request by providing the Cell-Id and optionally the geographical coordinates.

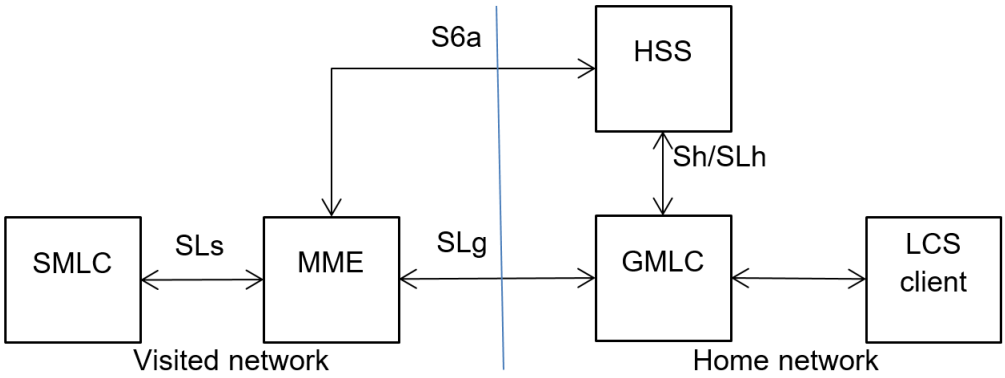

Figure 6 4G location detailed architecture

In order to retrieve the location information, 2 different signalling messages could be used see annex C for more detail):

- S6a: Insert-Subscriber-Data-Request/Answer (IDR/IDA)
- SLg: Provide-Location-Request/Answer (PLR/PLA) (LCS architecture)

The 2 signalling interfaces are able to carry the following parameters:

4G Location Request	IDR (S6a)	PLR (SLg)	Definition
Flag	IDR-Flags (EPS Location Information Request, Current Location Request, …)		TS 29.272
Location Type		SLg-Location-Type (current, last known, …)	TS 22.071

4G Location Answer	IDA (S6a)	PLA (SLg)	Definition
Cell-id	E-UTRAN-Cell-Global-Identity	ECGI	TS 29.002
Location X,Y+ Confidence	Geographical-Information	Location-Estimate	TS 23.032
AgeOfLocationInformation	AgeOfLocationInformation	Age-Of-Location-Estimate	TS 29.002

6.2 4G scenario

Based on those signalling messages, three solutions could be proposed in 4G in order to retrieve the Cell-Id and the associated geographical coordinates. The solution complexity and accuracy could vary depending on the visited network implementation:

- Cell-Id: the visited MME will provide the Cell-Id (ECGI) to the home GMLC
- Cell geographical coordinates: the visited MME will provide the geographical coordinates (latitude, longitude) of the cell to the home GMLC
- Object geographical coordinates: the visited MME (via the SMLC) will provide the geographical coordinates (latitude, longitude) of the object to the home GMLC.

6.2.1 4G / Cell-Id

The home network is able just to retrieve the Cell-Id where the object is located, based on the reception of the Provide-Location-Answer or the Insert-Subscriber-Data-Answer Diameter messages provided by the visited network, containing the cell identity.

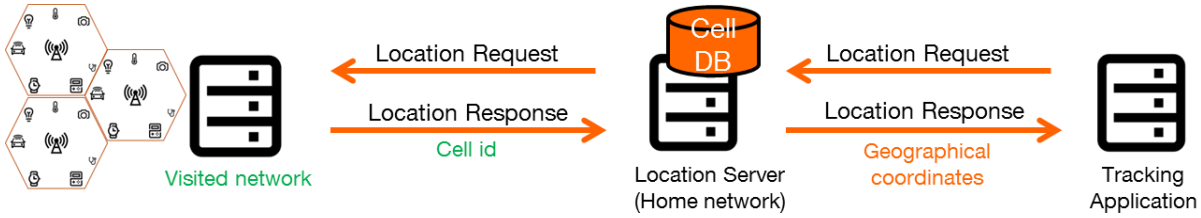

Figure 7 4G: Cell-Id

This solution is the simplest one, relying on the existing Insert-Subscriber-Data-Request message or requiring only the opening of the ProvideLocationRequest message of the visited network (MME side).

The major issue is the translation of the Cell-Id into geographical coordinates which could be based on external DB provided by external partners (like OTTs). Those DB accesses are costly and not always provide trusted information.

6.2.2 4G / Cell geographical coordinates

The home network is able to retrieve the Cell-Id where the object is located and the estimated geographical coordinates of the cell based on the Provide-Location-Answer or the Insert-Subscriber-Data-Answer Diameter message provided by the visited network.

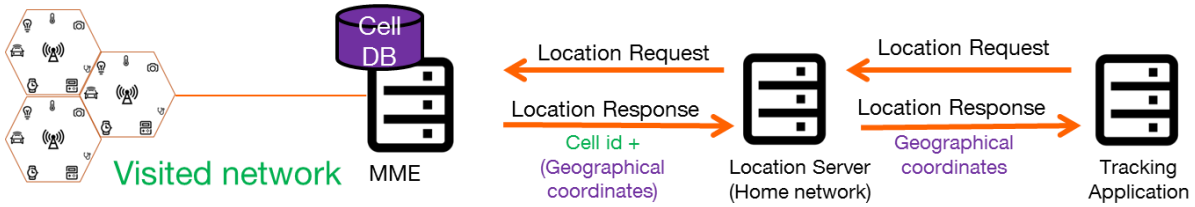

Figure 8 4G: Cell geographical coordinate

The solution is a little bit more complex due to the fact that the visited networks have to configure the MME cell list with the estimated geographical coordinates of the cell.

The major advantage is that they are no more dependency related to Over the Top OTTs external DBs for Cell-Id translation into geographical coordinates.

6.2.3 4G / Object geographical coordinate

The home network is able to retrieve the Cell-Id and the estimated geographical coordinates of the object based on the Provide-Location-Answer or the Insert-Subscriber-Data-Answer Diameter message provided by the visited network.

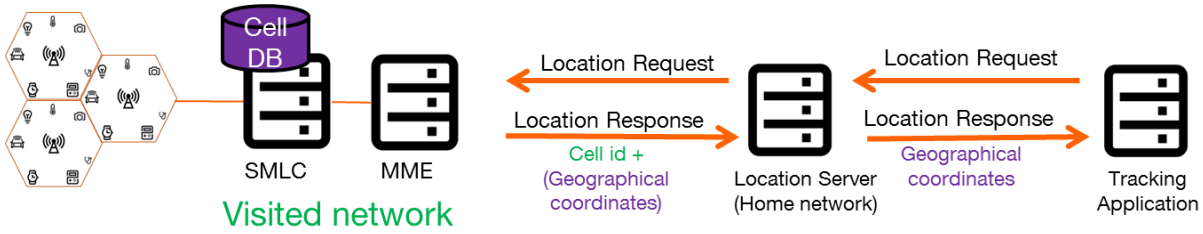

Figure 9 4G: Object geographical coordinate

The SMLC (Serving Mobile Location Centre) provided by the visited network is using various technologies to estimate the object location like E-CID (enhanced Cell-Id) or OTDOA (Observed Time Difference of Arrival). The advantage of the SMLC introduction is the accuracy improvement, while there is a significant increase of the solution cost.

7 5G networks location

7.1 Overview

All the 5G options proposed into this document are based on information exchanged with Hypertext Transfer Protocol Secure (HTTPS) signalling protocol, between the home and the visited network. The home network (via the Gateway Location Centre – GMLC) is able to retrieve the Cell-Id by sending a HTTPs message to the visited network. The AMF of the visited network is answering to this request by providing the Cell-Id and optionally also the geographical coordinates.

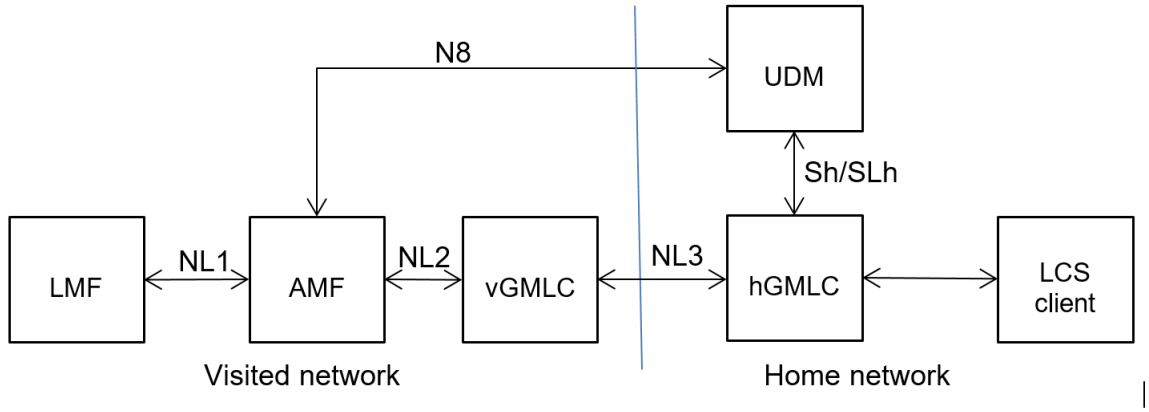

Figure 10 5G location detailed architecture

In order to retrieve the location information, 2 different HTTPs signalling messages could be used. See annex C for more detail):

- N8: ProvideLocationInfo
- NL2/3: ProvidePositioningInfo (LCS architecture related to MT-LR procedure)

The figure hereafter describes the Service Based approach for Location Services

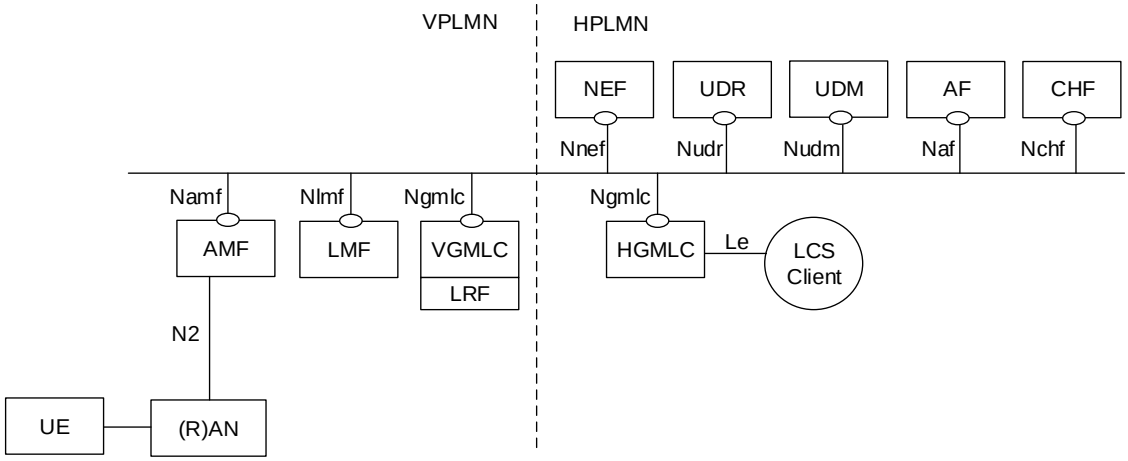

Figure 11 5G location detailed architecture (service based)

Namf_Location Service (3GPP TS29.518 [11]) defines the 2 potential methods:

- ProvideLocationInfo (annex C): allows a Network Function (NF) Service Consumer (e.g. Unified Data Management UDM) to request the Network Provided Location Information (NPLI) of a target UE.
- ProvidePositioningInfo (LCS architecture related to MT-LR procedure) (annex C): invoked by the NF Service Consumer (e.g. GMLC) to request the current geodetic and optionally civic location of the UE. The service operation triggers the AMF to invoke the service towards the LMF.

7.2 5G scenario

Based on those signalling messages, three solutions could be proposed in 5G (similar to 4G) to retrieve the Cell-Id and the associated geographical coordinates. The solution complexity and accuracy could vary depending on the visited network implementation:

- Cell-Id: the visited AMF will provide the Cell-Id (NR CGI) to the home GMLC.
- Cell geographical coordinate: the visited AMF will provide the geographical coordinates (latitude, longitude) of the cell to the home GMLC.
- Object geographical coordinate: the visited AMF (via the LMF) will provide the geographical coordinates (latitude, longitude) of the object to the home GMLC.

8 Conclusions

The table hereafter summarizes the impacts of the different options related to 4G and 5G:

	Roaming signalling exchanged	Positioning Accuracy	4G Visited Network Impact	5G Visited Network Impact	Cell BD: OTT dependency
Solution 1	Cell-Id	CID (100m-3km)	Low	Low	Yes
Solution 2	Cell geographical coordinates	CID (100m-3km)	Medium (MME impact)	Medium (AMF impact)	No
Solution 3	Object geographical coordinates	e-CID (500m) OTDOA (50-200m)	High (SMLC introduction)	High (LMF introduction)	No

This table shows that

- A reduced dependency to the OTTs Cell-Id DBs will be based on the Diameter/http enrichment, provided by the visited network (Solution 2)
- A better accuracy will require a SMLC/LMF investment at the visited network side (solution 3).

9 Further studies

- Use case: Periodical Location versus location on request
- Clear definition of latest known cell id in the core network (impact PSM, battery, …)
- Service Capability Exposure Function (SCEF) impact on location

Annex A Location parameters

A.1 Cell definition

The cells are identified in a different way according to the network technologies:

- 2/3G : GSM cellGlobalId (CGI)
- 4G: EUTRAN e-utranCellGlobalIdentity – (ECGI)
- 5G: nrCellGlobalIdentity – (NR-CGI)

A.1.1 CGI

Extract 3GPP TS 29.274

The coding of CGI (Cell Global Identifier) is depicted in Figure 8.21.1-1. Only zero or one CGI field shall be present in ULI IE.

Octets	Bits 8	7	6	5	4	3	2	1
a	MCC digit 2				MCC digit 1			
a+1	MNC digit 3				MCC digit 3			
a+2	MNC digit 2				MNC digit 1			
a+3 to a+4	Location Area Code (LAC)							
a+5 to a+6	Cell Identity (CI)							

Figure 12 CGI field

The Location Area Code (LAC) consists of 2 octets. Bit 8 of the Octet a+3 is the most significant bit and bit 1 of the Octet a+4 the least significant bit. The coding of the location area code is the responsibility of each administration. Coding using full hexadecimal representation (binary, not ASCII encoding) shall be used.

The Cell Identity (CI) consists of 2 octets. Bit 8 of the Octet a+5 is the most significant bit and bit 1 of the Octet a+6 the least significant bit. The coding of the cell identity is the responsibility of each administration. Coding using full hexadecimal representation (binary, not ASCII encoding) shall be used.

A.1.2 ECGI

Extract 3GPP TS 29.274

The coding of ECGI (E-UTRAN Cell Global Identifier) is depicted in Figure 8.21.5-1. Only zero or one E-UTRAN cell global identifier (ECGI) field shall be present in the Uplink Information Extraction ULI IE.

Octets	Bits 8	7	6	5	4	3	2	1
e	MCC digit 2				MCC digit 1			
e+1	MNC digit 3				MCC digit 3			
e+2	MNC digit 2				MNC digit 1			
e+3	Spare				ECI			
e+4 to e+6	ECI (E-UTRAN Cell Identifier)							

Figure 13 ECGI field

The E-UTRAN Cell Identifier (ECI) consists of 28 bits. The ECI field shall start with Bit 4 of the octet e+3, which is the most significant bit. Bit 1 of the Octet e+6 is the least significant bit. The coding of the E-UTRAN cell identifier is the responsibility of each administration. Coding using full hexadecimal representation (binary, not ASCII encoding) shall be used.

A.1.3 NR CGI

Extract 3GPP TS 38.413

IE/Group Name	Presence	Range	IE type and reference	Semantics description
PLMN Identity	M		OCTET STRING (SIZE(3))	Digits 0 to 9 encoded 0000 to 1001, 1111 used as filler digit. Two digits per octet: - bits 4 to 1 of octet n encoding digit 2n-1 - bits 8 to 5 of octet n encoding digit 2n PLMN Identity consists of 3 digits from MCC followed by either: - a filler digit plus 2 digits from MNC (in case of 2 digit MNC) or - 3 digits from MNC (in case of 3 digit MNC).
NR Cell Identity	M		BIT STRING (SIZE(36))	The leftmost bits of the *NR Cell Identity* IE correspond to the gNB ID

A.2 Location Information parameters

A.2.1 GeographicalInformation

Extract 3GPP TS 29.002

```
GeographicalInformation ::= OCTET STRING (SIZE (8))
--   Refers to geographical Information defined in 3GPP TS 23.032.
--   Only the description of an ellipsoid point with uncertainty circle
--   as specified in 3GPP TS 23.032 is allowed to be used
--   The internal structure according to 3GPP TS 23.032 is as follows:
--   Type of shape (ellipsoid point with uncertainty circle)              1 octet
--   Degrees of Latitude                        3 octets
--   Degrees of Longitude                       3 octets
--   Uncertainty code                           1 octet
```

Uncertainty code: defined in *3GPP TS 23.032*

A method of describing the uncertainty for latitude and longitude has been sought which is both flexible (can cover wide differences in range) and efficient. The proposed solution makes use of a variation on the Binomial expansion. The uncertainty *r*, expressed in metres, is mapped to a number K, with the following formula:

$$r = C\left((1+x)^K - 1\right)$$

with C = 10 and x = 0,1. With $0 \leq K \leq 127$, a suitably useful range between 0 and 1800 kilometres is achieved for the uncertainty, while still being able to code down to values as small as 1 metre. The uncertainty can then be coded on 7 bits, as the binary encoding of K.

Value of K	Value of uncertainty
0	0 m
1	1 m
2	2,1 m
-	-
20	57,3 m
-	-
40	443 m
-	-
60	3 km
-	-
80	20 km
-	-
100	138 km
-	-
120	927 km
-	-
127	1800 km

Table 1: Example values for the uncertainty Function

A.2.2 GeodeticInformation

Extract 3GPP TS 29.002

```
GeodeticInformation ::= OCTET STRING (SIZE (10))
--   Refers to Calling Geodetic Location defined in Q.763 (1999).
--   Only the description of an ellipsoid point with uncertainty circle
--   as specified in Q.763 (1999) is allowed to be used
--   The internal structure according to Q.763 (1999) is as follows:
--   Screening and presentation indicators    1 octet
--   Type of shape (ellipsoid point with uncertainty circle)               1 octet
--   Degrees of Latitude                      3 octets
--   Degrees of Longitude                     3 octets
--   Uncertainty code                         1 octet
--   Confidence                               1 octet
```

A.2.3 AgeOfLocationInformation

Extract 3GPP TS 29.002

```
AgeOfLocationInformation ::= INTEGER (0..32767)
-- the value represents the elapsed time in minutes since the last
-- network contact of the mobile station (i.e. the actuality of the
-- location information).
-- value "0" indicates that the MS is currently in contact with the
--           network
-- value "32767" indicates that the location information is at least
--               32767 minutes old
```

A.2.4 LocationInformation

Extract 3GPP TS 29.002

```
LocationInformation ::= SEQUENCE {
     ageOfLocationInformation            AgeOfLocationInformation          OPTIONAL,
     geographicalInformation             [0] GeographicalInformation       OPTIONAL,
     vlr-number                          [1] ISDN-AddressString            OPTIONAL,
     locationNumber                      [2] LocationNumber                OPTIONAL,
     cellGlobalIdOrServiceAreaIdOrLAI    [3] CellGlobalIdOrServiceAreaIdOrLAI
     OPTIONAL,
     extensionContainer                  [4] ExtensionContainer            OPTIONAL,
     ... ,
     selectedLSA-Id                      [5] LSAIdentity                   OPTIONAL,
     msc-Number                          [6] ISDN-AddressString            OPTIONAL,
     geodeticInformation                 [7] GeodeticInformation           OPTIONAL,
     currentLocationRetrieved            [8] NULL  OPTIONAL,
     sai-Present                         [9] NULL  OPTIONAL,
     locationInformationEPS              [10] LocationInformationEPS       OPTIONAL,
     userCSGInformation                  [11] UserCSGInformation           OPTIONAL,
     locationInformation5GS              [12] LocationInformation5GS       OPTIONAL }
-- sai-Present indicates that the cellGlobalIdOrServiceAreaIdOrLAI parameter contains
-- a Service Area Identity.
-- currentLocationRetrieved shall be present
-- if the location information were retrieved after a successful paging.
-- if the locationinformationEPS IE is present then the cellGlobalIdOrServiceAreaIdOrLAI
IE,
-- the ageOfLocationInformation IE, the geographicalInformation IE, the
geodeticInformation IE
-- and the currentLocationRetrieved IE (outside the locationInformationEPS IE) shall be
-- absent. As an exception, both the cellGlobalIdOrServiceAreaIdOrLAI IE including an
LAI and
-- the locationinformationEPS IE may be present in a MAP-NOTE-MM-EVENT.
-- UserCSGInformation contains the CSG ID, Access mode, and the CSG Membership
Indication in
-- the case the Access mode is Hybrid Mode.
-- The locationInformationEPS IE should be absent if locationInformationEPS-Supported
was not
-- received in the RequestedInfo IE.
-- The locationInformation5GS IE should be absent if UE did not access via 5GS and IM-
SSF.
```

A.2.5 LocationInformationGPRS

Extract 3GPP TS 29.002

```
LocationInformationGPRS ::= SEQUENCE {
     cellGlobalIdOrServiceAreaIdOrLAI    [0] CellGlobalIdOrServiceAreaIdOrLAI OPTIONAL,
     routeingAreaIdentity                [1] RAIdentity                    OPTIONAL,
     geographicalInformation             [2] GeographicalInformation       OPTIONAL,
     sgsn-Number                         [3] ISDN-AddressString            OPTIONAL,
     selectedLSAIdentity                 [4] LSAIdentity                   OPTIONAL,
     extensionContainer                  [5] ExtensionContainer            OPTIONAL,
     ...,
     sai-Present                         [6] NULL  OPTIONAL,
     geodeticInformation                 [7] GeodeticInformation           OPTIONAL,
     currentLocationRetrieved            [8] NULL  OPTIONAL,
     ageOfLocationInformation            [9] AgeOfLocationInformation      OPTIONAL,
     userCSGInformation                  [10] UserCSGInformation           OPTIONAL }
-- sai-Present indicates that the cellGlobalIdOrServiceAreaIdOrLAI parameter contains
-- a Service Area Identity.
-- currentLocationRetrieved shall be present if the location information
-- was retrieved after successful paging.
-- UserCSGInformation contains the CSG ID, Access mode, and the CSG Membership
Indication in
-- the case the Access mode is Hybrid Mode.
```

A.2.6 LocationInformationEPS

Extract 3GPP TS 29.002

```
LocationInformationEPS ::= SEQUENCE {
    e-utranCellGlobalIdentity           [0] E-UTRAN-CGI                 OPTIONAL,
    trackingAreaIdentity                [1] TA-Id OPTIONAL,
    extensionContainer                  [2] ExtensionContainer          OPTIONAL,
    geographicalInformation             [3] GeographicalInformation     OPTIONAL,
    geodeticInformation                 [4] GeodeticInformation         OPTIONAL,
    currentLocationRetrieved            [5] NULL                        OPTIONAL,
    ageOfLocationInformation            [6] AgeOfLocationInformation    OPTIONAL,
    ...,
    mme-Name [7] DiameterIdentity       OPTIONAL }
-- currentLocationRetrieved shall be present if the location information
-- was retrieved after successful paging.
```

A.2.7 LocationInformation5GS

Extract 3GPP TS 29.002

```
LocationInformation5GS ::= SEQUENCE {
    nrCellGlobalIdentity                [0] NR-CGI                      OPTIONAL,
    e-utranCellGlobalIdentity           [1] E-UTRAN-CGI                 OPTIONAL,
    geographicalInformation             [2] GeographicalInformation     OPTIONAL,
    geodeticInformation                 [3] GeodeticInformation         OPTIONAL,
    amf-address                         [4] FQDN                        OPTIONAL,
    trackingAreaIdentity                [5] TA-Id                       OPTIONAL,
    currentLocationRetrieved            [6] NULL                        OPTIONAL,
    ageOfLocationInformation            [7] AgeOfLocationInformation    OPTIONAL,
    vplmnId  [8] PLMN-Id                OPTIONAL,
    localtimeZone                       [9] TimeZone                    OPTIONAL,
    rat-Type [10] Used-RAT-Type         OPTIONAL,
    extensionContainer                  [11] ExtensionContainer         OPTIONAL,
    ...}
-- currentLocationRetrieved shall be present if the location information
-- was retrieved after successful paging.
```

Annex B Location procedure

B.1 Circuit Switch (CS) MT-LR procedure (2/3G)

The figure hereafter describes the 2G/3G MT-LR procedure (3GPP TS23.271 [3]).

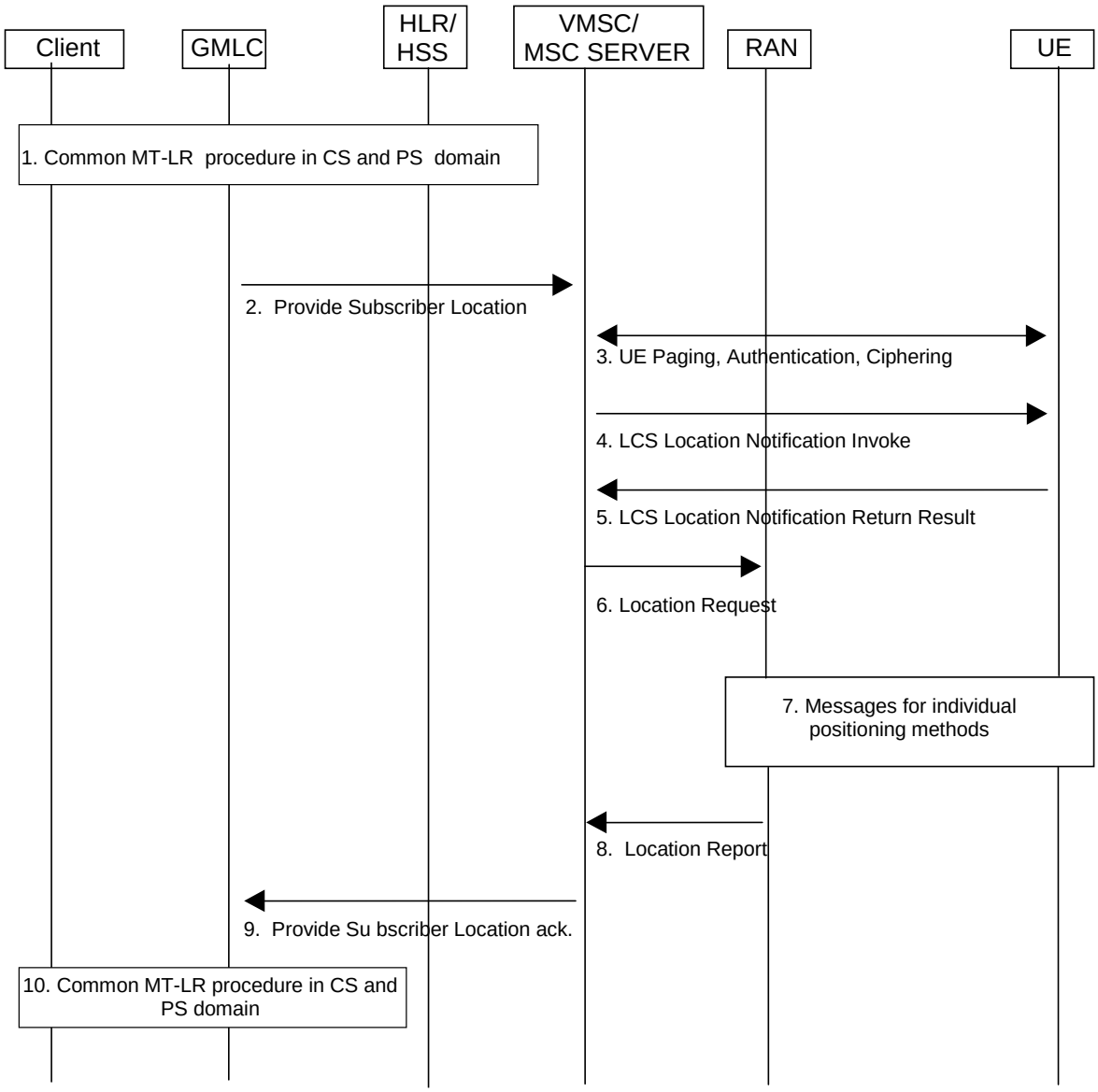

B.2 Evolved packet Core (EPC) MT-LR procedure (4G)

The figure hereafter describes the 4G MT-LR procedure (3GPP TS23.271 [3]).

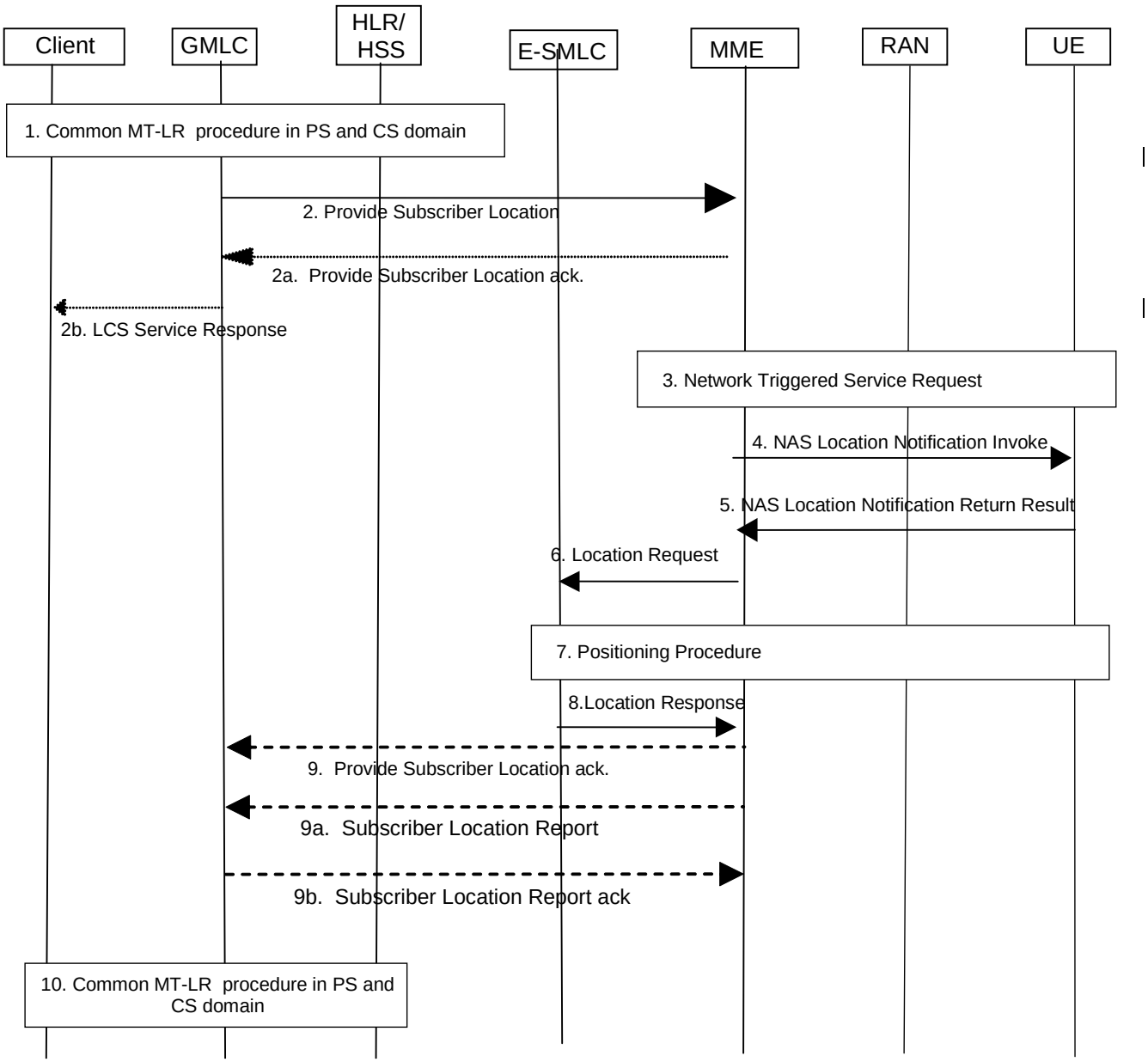

B.3 5GC MT-LR procedure (5G)

The figure hereafter describes the 5G MT-LR procedure (3GPP TS23.273 [8]).

This procedure enables the immediate location retrieval, not waiting for the UE availability (if UE is not available, the AMF will answer to the GMLC with the last known EU location (Cell-Id and Age).

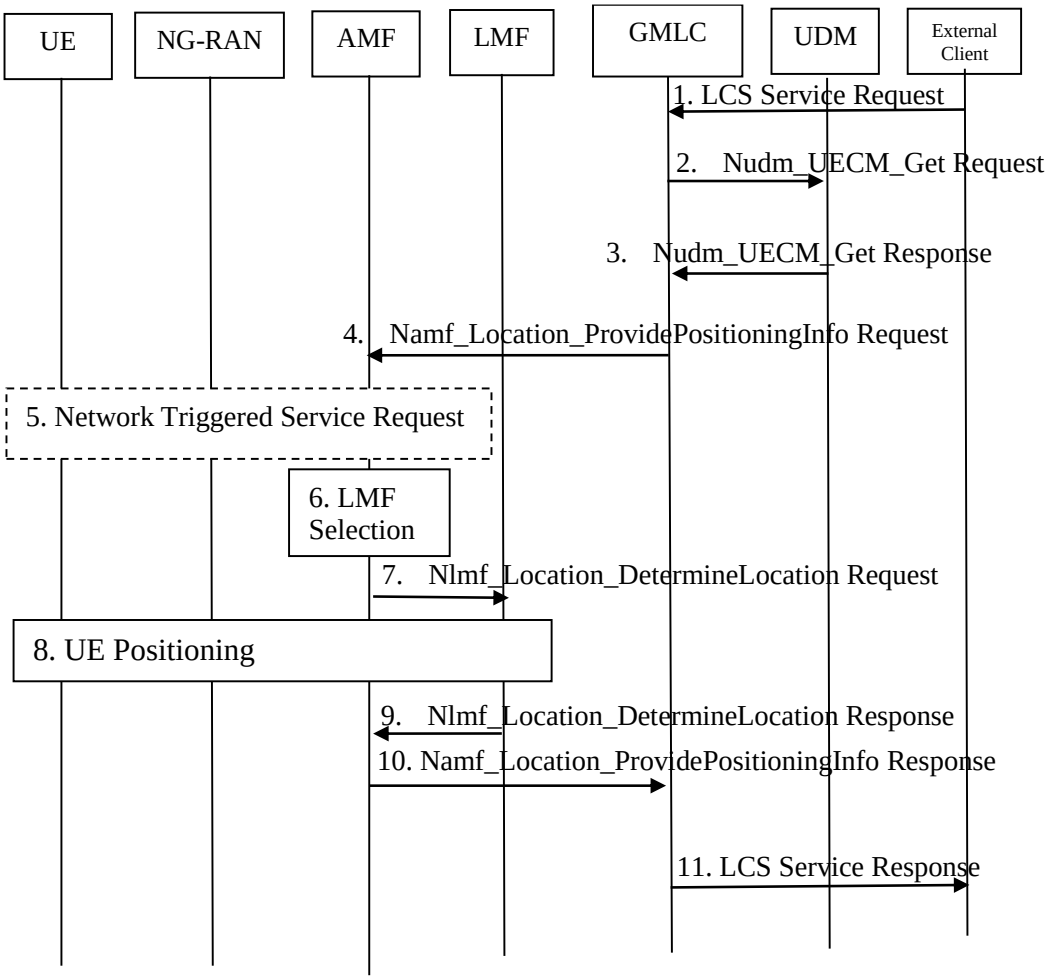

B.4 Deferred 5GC MT-LR procedure (5G)

The figure hereafter describes the Deferred 5GC-MT-LR Procedure for Periodic, Triggered and UE Available Location Events (3GPP TS23.273 [8]).

This procedure enables the location retrieval, waiting for UE availability.

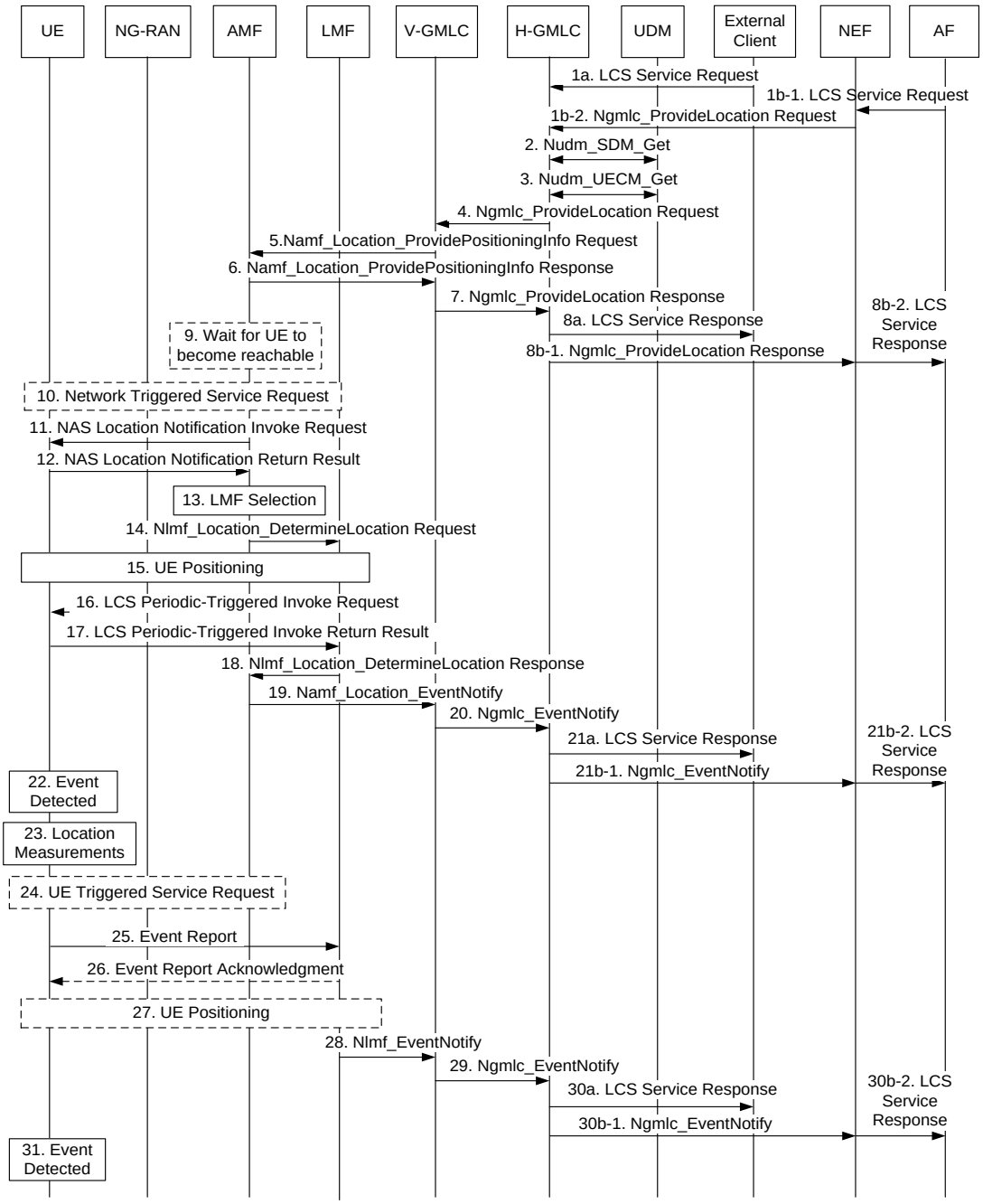

Annex C Location interfaces

C.1 4G - S6a / S6d

C.1.1 Insert-Subscriber-Data-Request (IDR) Command

The Insert-Subscriber-Data-Request (IDR) command, indicated by the Command-Code field set to 319 and the 'R' bit set in the Command Flags field, is sent from HSS) to MME or SGSN.

Message Format when used over the S6a or S6d application (extract 29.272):

< Insert-Subscriber-Data-Request> ::= < Diameter Header: 319, REQ, PXY, 16777251 >

< Session-Id >
[DRMP]
[Vendor-Specific-Application-Id]
{ Auth-Session-State }
{ Origin-Host }
{ Origin-Realm }
{ Destination-Host }
{ Destination-Realm }
{ User-Name }
*[Supported-Features]
{ Subscription-Data}
[IDR- Flags]
*[Reset-ID]
*[AVP]
*[Proxy-Info]
*[Route-Record]

IDR-Flags :

- EPS Location Information Request, This bit, when set, shall indicate to the MME or the SGSN that the HSS requests the MME or SGSN for location information
- Current Location Request: This bit when set shall indicate to the MME or the SGSN that the HSS requests the MME or SGSN to provide the most current location information by paging the UE if the UE is in idle mode. This bit is used only in combination with the " Evolved Packet System (EPS) Location Information Request" bit.

C.1.2 Insert-Subscriber-Data-Answer (IDA) Command

The Insert-Subscriber-Data-Answer (IDA) command, indicated by the Command-Code field set to 319 and the 'R' bit cleared in the Command Flags field, is sent from MME or SGSN to HSS.

Message Format when used over the S6a or S6d application (extract 29.272):

< Insert-Subscriber-Data-Answer> ::= < Diameter Header: 319, PXY, 16777251 >
< Session-Id >
[DRMP]
[Vendor-Specific-Application-Id]
*[Supported-Features]
[Result-Code]
[Experimental-Result]
{ Auth-Session-State }
{ Origin-Host }
{ Origin-Realm }
[IMS-Voice-Over-PS-Sessions-Supported]
[Last-UE-Activity-Time]
[RAT-Type]
[IDA-Flags]
[EPS-User-State]
[EPS-Location-Information]
[Local-Time-Zone]
[Supported-Services]
*[Monitoring-Event-Report]
*[Monitoring-Event-Config-Status]
*[AVP]
[Failed-AVP]
*[Proxy-Info]
*[Route-Record]

This Information Element shall contain the EPS-Location Information. It shall be present if the EPS location information was requested within IDR

EPS-Location-Information ::= <AVP header: 1496 10415>

[MME-Location-Information]

[SGSN-Location-Information]

MME-Location-Information ::= <AVP header: 1600 10415>

[E-UTRAN-Cell-Global-Identity]

[Tracking-Area-Identity]

[Geographical-Information]: The Geographical-Information AVP is of type OctetString and shall contain the geographical Information of the user. For details and octet encoding, see 3GPP TS 29.002

[Geodetic-Information]: The Geodetic-Information AVP is of type OctetString and shall contain the Geodetic Location of the user. For details and octet encoding, see 3GPP TS 29.002

[Current-Location-Retrieved]

[Age-Of-Location-Information]: The Age-Of-Location-Information AVP is of type Unsigned32 and shall contain the elapsed time in minutes since the last network contact of the user equipment. For details, see 3GPP TS 29.002.

C.2 4G - SLg interface

C.2.1 Provide-Location-Request (PLR) Command

The Provide-Location-Request (PLR) command, indicated by the Command-Code field set to 8388620 and the 'R' bit set in the Command Flags field, is sent by the GMLC in order to request subscriber location to the MME or SGSN.

Message Format (Extract 29.172)

< Provide-Location-Request> ::= < Diameter Header: 8388620, REQ, PXY, 16777255 >
< Session-Id >
[Vendor-Specific-Application-Id]
{ Auth-Session-State }
{ Origin-Host }
{ Origin-Realm }
{Destination-Host }
{ Destination-Realm }
{ SLg-Location-Type }
[User-Name]
[MSISDN]
[IMEI]
{ LCS-EPS-Client-Name }
{ LCS-Client-Type }
[LCS-Requestor-Name]
[LCS-Priority]
[LCS-QoS]
[Velocity-Requested]
[LCS-Supported-GAD-Shapes]
[LCS-Service-Type-ID]
[LCS-Codeword]
[LCS-Privacy-Check-Non-Session]
[LCS-Privacy-Check-Session]
[Service-Selection]
[Deferred-Location-Type]
[PLR-Flags]
*[Supported-Features]
*[AVP]
*[Proxy-Info]
*[Route-Record]

C.2.2 Provide-Location-Answer (PLA) Command

The Provide-Location-Answer (PLA) command, indicated by the Command-Code field set to 8388620 and the 'R' bit cleared in the Command Flags field, is sent by the MME or SGSN to the GMLC in response to the Provide-Location-Request command.

Message Format (Extract 29.172)

< Provide-Location-Answer > ::= < Diameter Header: 8388620, PXY, 16777255 >
< Session-Id >
[Vendor-Specific-Application-Id]
[Result-Code]
[Experimental-Result]
{ Auth-Session-State }
{ Origin-Host }
{ Origin-Realm }
[Location-Estimate]
[Accuracy-Fulfilment-Indicator]
[Age-Of-Location-Estimate]
[Velocity-Estimate]
[EUTRAN-Positioning-Data]
[ECGI]
[GERAN-Positioning-Info]
[Cell-Global-Identity]
[UTRAN-Positioning-Info]
[Service-Area-Identity]
[Serving-Node]
[PLA-Flags]
[ESMLC-Cell-Info]
[Civic-Address]
[Barometric-Pressure]
*[Supported-Features]
*[AVP]
[Failed-AVP]
*[Proxy-Info]
*[Route-Record]

Location-Estimate	1242	3GPP TS 32.299 [10]	OctetString	

The Location-Estimate AVP (AVP code 1242) is of type OctetString and contains an estimated location of an MS in universal coordinates and the accuracy of the estimation. Refers to the geographical area description in TS 23.032 [227] for the internal structure and encoding of this AVP.

C.3 5G – Namf_ Location_ProvideLocationInfo service operation

Extract from 3GPP 23.502

Service Name	Service Operations	Operation Semantic	Known Consumer(s)
Namf_Location	ProvideLocationInfo	Request/Response	UDM

Service operation name: Namf_Location_ProvideLocationInfo

Description: Provides Network Provided Location Information (NPLI) of a target UE to the consumer NF.

Input, Required: UE Identification SUPI. **(*)**

Input, Optional: 5GS Location Information Request, Current Location Request, (RAT) type Requested, Local Time Zone Request. **(*)**

Output, Required: Success/Failure indication.

Output, Optional: 5GS Location Information (Cell Identity, Tracking Area Identity, Geographical/Geodetic Information, Current Location Retrieved, Age of Location Information, Current RAT Type), Local Time Zone, Failure Cause. In the case of non-3GPP access: a UE local IP) address (used to reach the N3IWF/TNGF) and optionally UDP) or TCP) source port number (if (NAT) is detected).**(*)**

(*) As this is a copy of the 3GPP specs; Abbreviations are as follows:

SUPI: Subscription Permanent Identifier

RAT: Radio Access Technology

IP: Internet Protocol

UDP: User Datagram Protocol

TCP: Transmission Control Protocol

NAT: Network Address Translation

C.4 5G - Namf_ Location_ProvidePositioningInfo service operation

Extract from 3GPP 23.502

Service Name	Service Operations	Operation Semantic	Known Consumer(s)
Namf_Location	ProvidePositioningInfo	Request/Response	GMLC

Service operation name: Namf_Location_ProvidePositioningInfo

Description: Provides UE positioning information to the consumer NF.

Input, Required: UE Identification (SUPI or Permanent Equipment Identity (PEI), Client Type.

Input, Optional: Location QoS, Supported GAD shapes, UE Privacy Requirements, External Client Identification, Deferred location type, Deferred location parameters, Notification Target address, Notification Correlation ID.

Output, Required: Success/Failure indication

Output, Optional: Geodetic Location, Civic Location, Position Methods Used, Failure Cause.

Annex D Document Management

D.1 Document History

Version	Date	Brief Description of Change	Approval Authority	Editor / Company
1.0	08/04/2020	Initial version		Marc Balon, Orange

D.2 Other Information

Type	Description
Document Owner	Marc Balon
Editor / Company	Orange

It is our intention to provide a quality product for your use. If you find any errors or omissions, please contact us with your comments. You may notify us at prd@gsma.com

Your comments or suggestions & questions are always welcome.