

NG.141 Guidelines for URSP
Version 4.0
27 Oct 2025

Security Classification: Non-Confidential

Access to and distribution of this document is restricted to the persons permitted by the security classification. This document is subject to copyright protection. This document is to be used only for the purposes for which it has been supplied and information contained in it must not be disclosed or in any other way made available, in whole or in part, to persons other than those permitted under the security classification without the prior written approval of the Association.

Copyright Notice

Copyright © 2026 GSM Association

Disclaimer

The GSMA makes no representation, warranty or undertaking (express or implied) with respect to and does not accept any responsibility for, and hereby disclaims liability for the accuracy or completeness or timeliness of the information contained in this document. The information contained in this document may be subject to change without prior notice.

Compliance Notice

The information contain herein is in full compliance with the GSMA Antitrust Compliance Policy.

This Permanent Reference Document is classified by GSMA as an Industry Specification, as such it has been developed and is maintained by GSMA in accordance with the provisions set out GSMA AA.35 - Procedures for Industry Specifications.

Table of Contents

1 Introduction 3
1.1 Overview 3
1.2 Scope 3
1.3 Abbreviations 3
1.4 References 4
1.5 Conventions 5
2 A Brief introduction to Network Slicing 5
3 URSP basics 6
3.1 General 6
3.2 URSP rules 6
3.3 URSP and registration procedure 9
3.4 URSP and PDU Session Establishment 10
3.5 URSP and PDN Connection Establishment in EPS 10
3.6 Receiving new URSP rules 11
3.7 Receiving updated Allowed NSSAI and/or Configured NSSAI 11
3.8 Traffic categories 11
3.9 URSP and Access traffic routing 13
3.9.1 Traffic routing based on Access Traffic Sterring, Switching, and Splitting 14
3.9.2 Traffic routing based on Non-Seamless WLAN offload 15
4 Example URSP rule configuration and usage 16
4.1 Single network slice, single PDU Session 16
4.1.1 Application Descriptor as Traffic Descriptor 16
4.1.2 DNN as Traffic Descriptor 17
4.2 Two PDU Sessions 18
4.2.1 Two PDU Sessions on the same network slice 18
4.2.2 Two PDU Sessions on two network slices 19
4.3 Three PDU Sessions / two network slices for a NG.114 compliant UE 20
4.3.1 Using Local configuration and URSP 20
4.3.2 Using only URSP rules 21
4.4 Match-all rule (Using only URSP rules) 23
4.5 Adding a network slice for a NG.114 compliant UE 25
4.5.1 Using only URSP rules – gaming traffic on the Internet DNN 25
4.5.2 Using only URSP rules – gaming traffic on the Gaming DNN 27
4.6 Removing a network slice for a UE 29
4.7 Operator specific connection capability 31
4.8 Access traffic routing 32
4.8.1 All applications traffic served via ATSSS 33
4.8.2 Selected application traffic served via ATSSS 34
Annex A An Example of application class mapping to traffic categories 36
Annex B Guidance for ecosystem with use of network slicing 37
B.1 Information to support application developers 37
B.2 Information to support MNO 37

Annex C Recommendation for usage of UE local configuration 38
Document Management 39
Document History 39
Other Information 39

1 Introduction

1.1 Overview

This document aims to provide a standardised view on making use of UE Route Selection Policy (URSP) in 5G System (5GS).

References are made to 3GPP specifications covering the 5GS, as well as other GSMA NG PRDs, such as GSMA PRD NG.113 [1] where 5GS Roaming Guidelines are specified. 3GPP Release 15 is taken as a basis unless otherwise stated.

1.2 Scope

This PRD presents material about URSP as specified by the 3GPP, covering UEs connected to either to 5GS or EPS. This document includes industry-aligned guidelines on how to configure URSP and use URSP rules in different use cases. In particular, the document discusses which Traffic Descriptors and which Route Selection Descriptors to use for these use cases. Also, this PRD provides a description of Traffic Categories and additional information to assist the industry in making use of Traffic Categories in a consistent manner.

Industry alignment between network operators, UE vendors, and network vendors may require profiling of existing 3GPP specifications.

1.3 Abbreviations

Term	Description
5GC	5G Core
5GS	5G System
AMF	Access and Mobility Management Function
ANDSP	Access Network Discovery & Selection policy
APN	Access Point Name
ATSSS	Access Traffic Steering, Switching and Splitting
DL	Downlink
DNN	Data Network Name
HPMN	Home Public Mobile Network
HOS	Home Operator Services
IMS	IP Multimedia Subsystem
MA PDU	Multi-Access PDU
MBB	Mobile Broadband

Term	Description
MNO	Mobile Network Operator
NAS	Non-Access-Stratum
NEST	Network Slice Type
NSSAI	Network Slice Selection Assistance Information
NSSF	Network Slice Selection Function
NSWO	Non-Seamless WLAN Offload
OEM	Original Equipment Manufacturer
OS	Operating System
PCF	Policy Control Function
PCO	Protocol Configuration Option
PDU	Protocol Data Unit
PLMN	Public Land Mobile Network
PRD	Permanent Reference Document
SA PDU	Single-Access PDU
SD	Slice Differentiator
SMF	Session Management Function
S-NSSAI	Single Network Slice Selection Assistance Information
SSC	Session and Service Continuity
SST	Slice/Service Type
TS	Technical Specification
UDM	Unified Data Management
UE	User Equipment
UL	Downlink
UPSI	UE Policy Section Identifier
URSP	UE Route Selection Policy
VPMN	Visited Public Mobile Network

1.4 References

Ref	Doc Number	Title
[1]	PRD NG.113	5GS Roaming Guidelines
[2]	RFC 2119	“Key words for use in RFCs to Indicate Requirement Levels”, S. Bradner, March 1997. Available at http://www.ietf.org/rfc/rfc2119.txt
[3]	RFC 8174	Ambiguity of Uppercase vs Lowercase in RFC 2119 Key Words, B. Leiba, May 2017. Available at https://www.rfc-editor.org/info/rfc8174
[4]	PRD NG.114	IMS Profile for Voice, Video and Messaging over 5GS
[5]	3GPP TS 23.501	System Architecture for the 5G System
[6]	3GPP TS 23.502	Procedures for the 5G System
[7]	3GPP TS 23.503	Policy and Charging Control Framework for the 5G System

Ref	Doc Number	Title
[8]	3GPP TS 24.526	User Equipment (UE) policies for 5G System (5GS)
[9]	3GPP TS 24.501	Non-Access-Stratum (NAS) protocol for 5G System (5GS)
[10]	PRD NG.116	Generic Network Slice Template
[11]	PRD TS.62	UE Requirements Related to Network Slicing using URSP
[12]	3GPP TS 24.193	5G System Access Traffic Steering, Switching and Splitting (ATSSS)

1.5 Conventions

"The key words "MUST", "MUST NOT", "REQUIRED", "SHALL", "SHALL NOT", "SHOULD", "SHOULD NOT", "RECOMMENDED", "MAY", and "OPTIONAL" in this document are to be interpreted as described in RFC 2119 [2] and clarified by RFC8174 [3], when, and only when, they appear in all capitals, as shown here."

For documents not containing normative requirements, this section may be deleted.

2 A Brief introduction to Network Slicing

Network slicing is a mandatory feature of the 5GS, i.e., there is at least one network slice in the network and every UE uses at least one network slice. As defined in 3GPP TS 23.501 [5], a network slice is a logical network that provides specific network capabilities and network characteristics. The use of network slices is profiled for the user network interface of an IMS voice capable device on 5GS in GSMA PRD NG.114 [4] and for roaming in GSMA PRD NG.113 [1].

In some use cases a UE can just use a single network slice, and one or more PDU Sessions (to different DNNs) in this network slice to support different services as needed, see Section **Error! Reference source not found.**. For example, a UE may use one PDU Session for I nternet access and another PDU Session for IMS services. The reader should refer to GSMA PRD NG.114 [4] for more details on IMS profiling for 5GS. For other use cases, a UE may use two or more network slices, each with one or more PDU Sessions, see also Section **Error! R eference source not found.**.

A Single Network Slice Selection Assistance Information (S-NSSAI) identifies a network slice in a PLMN. The S-NSSAI contains at least one Service/Slice Type (SST) and can include a Slice Differentiator (SD). The SST may be either a Standardized SST taking one of the values specified in Table 5.15.2.2-1 of 3GPP TS 23.501 [5] or an operator-specific SST. A NSSAI is an array of S-NSSAIs and identifies the set of the corresponding network slices.

A UE can provide a Requested NSSAI in the Initial Registration or in a Mobility Registration Update to indicate to the network the network slices that it is interested in. The Requested NSSAI is determined by the UE as specified in Section 5.15.5.2.1 of 3GPP TS 23.501 [5]. The network may provide an Allowed NSSAI to a UE (i.e., the network slices that the network allows the UE to use) and, if applicable, also indicate that a subset of the Requested S-NSSAIs are rejected S-NSSAIs (i.e., network slices that the UE cannot use, for example, if not available at the current UE's location). If a list of rejected S-NSSAIs is provided, the UE should not request these S-NSSAIs again depending on the criteria associated with the cause for rejection in Registration procedure or in a UE Configuration Update procedure. See Section

5.15.5.2.1 of 3GPP TS 23.501 [5] for further details regarding Allowed NSSAI and rejected S-NSSAIs.

The Requested NSSAI and the Allowed NSSAI can include up to 8 S-NSSAIs. The Configured NSSAI and Pending NSSAI can include up to 16 S-NSSAIs (see 3GPP TS 24.501 [9]).

The UE subscription information must contain at least one default S-NSSAI and at most eight (8) default S-NSSAIs. The default S-NSSAIs are used when the UE performs a registration without including any S-NSSAI value in the Requested NSSAI or when the Requested NSSAI is incorrect (e.g., the requested NSSAI includes S-NSSAIs that cannot be provided together in the Allowed NSSAI or that are not part of the Configured NSSAI). Upon receiving the registration request, and after receiving the local information and subscription data from the Unified Data Management (UDM), the Access and Mobility Management Function (AMF) uses the UDM data and the result of any NSSAA to determine which S-NSSAI to add into Allowed NSSAI; the AMF may also interrogate the Network Slice Selection Function (NSSF) to determine the Allowed NSSAI.

When available, the UE can use the URSP rules to identify the S-NSSAIs to include/add to the Requested NSSAI and to determine the validity of a rule checking against the Allowed NSSAI. More details on these aspects are further elaborated in Section 3.

3 URSP basics

3.1 General

URSP is a 5G feature that enables a Mobile Network Operator (MNO) to use URSP rules, which instruct the UE to map matching uplink application traffic (user data traffic) to PDU Session connectivity parameters or to route the application traffic outside of a PDU Session. The UE may need to know a set of parameters (e.g., S-NSSAI and Data Network Name (DNN)) to be used in a PDU Session establishment. URSP rules can be provisioned on the UE or provided by a network to the UE.

While in the 3GPP specifications it is not mandatory for the UE to support URSP, the GSMA has profiled in GSMA PRD NG.114 [4] that the support of URSP, as specified in Section 6.6.2 of 3GPP TS 23.503 [7], is mandatory for UEs supporting IMS voice over 5GS (e.g., a smartphone using 5GS). This embraces the support of URSP rules and the support of the UE Configuration Update procedure for transparent UE Policy delivery, which is used to provide URSP rules to UEs.

Note: The UE Configuration Update procedure for transparent UE Policy delivery is part of the UE Policy Association Establishment and UE Policy Association Modification procedures defined in Sections 4.16.11 and 4.16.12 of 3GPP TS 23.502 [6].

3.2 URSP rules

URSP includes a list of URSP rules. Readers should refer to 3GPP TS 23.503 [7] and 3GPP TS 24.526 [8] for a complete and authoritative description of URSP. Each URSP rule contains:

- Rule Precedence: Determines the order in which an URSP rule is enforced in the UE.
- Traffic descriptor: Used to determine whether the rule matches. A match can be based upon, e.g.
    - Application descriptors: Operating System Identifier (OSId) and OS specific Application Identifier(s) (OSAppId(s))
        - According to 3GPP, the OSAppId is an identifier associated with a given application and uniquely identifying that application within the UE for a given Operating System (OS).
        - OSAppIds are OS-specific and not specified by 3GPP.
    - Destination IP or non-IP descriptors: this can be, e.g., destination IP address or prefix, destination port number, or protocol ID.
    - DNN.
    - Domain descriptors: destination Fully Qualified Domain Name (FQDN) or regular expression which are used as a domain name matching criteria as specified in 3GPP Release 16 TS 24.526 [8].
    - Connection Capabilities: See Section 5.2 in 3GPP TS 24.526 [8] for the format and some standardized values and operator-specific values of the Connection Capabilities. Traffic Categories are encoded within the Connection Capabilities Information Element (IE). One or more values can be provided**Error! Reference source not found.**.
- List of Route Selection Descriptors, each Route Selection Descriptor
    - Must contain
        - Precedence value of the Route Selection Descriptor.
    - May contain, e.g.
        - Session and Service Continuity (SSC) Mode Selection: One single value.
        - Network Slice Selection: One or more S-NSSAIs.
        - DNN Selection: One or more DNNs.
        - PDU Session Type Selection: One single value (e.g., IPv4v6 or IPv6).
        - Access Type preference: Indicates the preferred Access Type (e.g., 3GPP or non-3GPP).
        - Route Selection Validation as specified in 3GPP Release 16 TS 23.503 [7] and 3GPP Release 16 TS 24.526 [8]:
            - Time Window: Indicates the time window when the matching traffic is allowed.
            - Location Criteria: Indicates the UE location where the matching traffic is allowed.

DNN can be in both Traffic descriptor and in Route Selection Descriptor according to 3GPP Release 17 TS 23.503, allowing thereby to replace a DNN provided as Traffic descriptor.

It is recommended to include both DNN Selection and Network Slice Selection in the Route Selection Descriptor in the default URSP rule and all non-default URSP rules.

NOTE 1: Including both DNN Selection and Network Slice Selection in the Route Selection Descriptor avoids that the network needs to determine both DNN and S-NSSAI for the PDU Session. especially in case more than one PDU session has to be established.

NOTE 2: For a UE compliant to GSMA PRD NG.114 [4], the default URSP rule is typically used to forward traffic to the Internet DNN.

3GPP Release 16 TS 24.526 mandates to include either PDU Session Type Selection or non-seamless non-3GPP offload indication in Route Selection Descriptor. In the current version of this document only use of PDU Session Type Selection is considered.

The UE can be pre-configured with URSP rules by an MNO as well as be provisioned with URSP rules by the Policy Control Function (PCF, see 3GPP TS 23.503 [7]). If the UE is provisioned with URSP rules, the pre-configured URSP rules are not evaluated.

At most one of the provisioned URSP rules can be defined as the default URSP rule and at most one of the pre-configured URSP rules can be defined as the default URSP rule. The default URSP rule contains the “match all” Traffic descriptor (see Section 4.2.1 of 3GPP TS 24.526 [8]) and has the lowest priority (i.e., highest precedence value), see Section 6.6.2 of 3GPP TS 23.503 [7].

In addition to pre-configured and provisioned URSP rules, a UE may store a UE Local Configuration about the association of an application to e.g., a PDU Session (e.g., an operator provided S-NSSAI and DNN or application-specific parameters to set up a PDU Session). A UE compliant to GSMA PRD NG.114 [4] can use UE Local Configuration to establish PDU Sessions to, for example, the IMS DNN, the Internet DNN, the Home Operator Services (HOS) DNN and Mission Critical Communication DNN. The format and contents of UE Local Configuration is not specified and left for UE implementations. See Annex C for some recommendations regarding the usage of UE Local Configuration.

NOTE 3: An MNO may provide information to Original Equipment Manufacturer (OEM) for UE Local Configuration.

UE Local Configuration may contain information about the association of an application to either a PDU Session or to Non-Seamless WLAN Offload.

NOTE 4: 3GPP TS 23.503 [7] uses the term Non-Seamless Offload, 3GPP TS 23.501 [5] uses the term Non-Seamless WLAN Offload, and 3GPP TS 24.526 [8] uses the term Non-Seamless non-3GPP Offload. In the context of this document only offload to WLAN is considered.

If due to UE Local Configuration, a UE application requests a network connection using Non-Seamless WLAN Offload, the UE shall use Non-Seamless WLAN Offload for this application without evaluating the URSP rules as specified in Section 6.1.2.2.1 of 3GPP TS 23.503 [7].

Upon receiving an upper layer request, the UE evaluates the URSP rules in order of priority and proceeds as follows (see also Section 6.1.2.2.1 of 3GPP TS 23.503 [7]):

1. If a non-default URSP rule matches the upper layer request, the UE selects this URSP rule to associate the application to a PDU Session (the UE may establish a new PDU Session or use an existing PDU Session, see Section 4.2.2 of 3GPP TS 24.526 [8]).
2. If no matching non-default URSP rule is found or the UE does not have any non-default URSP rules, the UE checks if a UE Local Configuration is available for the requesting application.

    a) If a suitable UE Local Configuration exists, the UE selects this UE Local Configuration to associate the application to a PDU Session (see Section 4.2.2 of 3GPP TS 24.526 [8]).
    b) If a suitable UE Local Configuration does not exist and the default URSP rule is defined, the UE selects the default URSP rule to associate the application to a PDU Session (see Section 4.2.2 of 3GPP TS 24.526 [8]).
    c) If a suitable UE Local Configuration does not exist and the default URSP rule is not defined, the way the UE associates the application to a PDU Session is implementation-specific.

NOTE 5: The term “upper layer” in this document denotes any layer that sends (connection) requests to an URSP execution entity in the UE, see also 3GPP TS 24.526 [8]. An upper layer can be the UE application layer or the Operating System.

For more details on additional checks necessary before an existing PDU Session can be used, see Section 6.6.2.3 of 3GPP TS 23.503 [7].

3.3 URSP and registration procedure

Per 3GPP TS 23.501 [5], a UE may use a Requested NSSAI that includes up to eight S-NSSAIs. A UE provides a Requested NSSAI in the Registration procedure amongst others based on available URSP rules or UE Local Configuration. The UE uses applicable URSP rules or the UE Local Configuration to ensure that the S-NSSAIs included in the Requested NSSAI are not in conflict with the URSP rules or with the UE Local Configuration.

The S-NSSAI included in the URSP rules is related to the Allowed NSSAI provided by the network to the UE during the registration procedure. If the Allowed NSSAI contains an S-NSSAI for which a matching URSP rule exists, then this rule can be applied (following the details specified in 3GPP TS 23.503 [7]). If the UE is roaming, then the S-NSSAI in the URSP rule is the HPMN S-NSSAI (see also Section 6.1 of GSMA PRD NG.113 [1]).

The UE and the network must support the UE Policy Container as specified in sections 5.4.5 and 5.5.1 of 3GPP TS 24.501 [9] and section 6.1.2.2.2 of 3GPP TS 23.503 [7]. The UE must include the UE Policy Section Identifiers (UPSI), if available, in the UE Policy Container. The AMF provides the UE Policy Container to the PCF. The PCF provides URSP rules to the UE in one or more UE Policy Sections each identified by an UPSI. The PCF can provide new UE Policy Sections to the UE, and the PCF can replace and or delete existing UE Policy Sections in the UE.

Note: 3GPP TS 24.501 [9] uses UE Policy Section Identifier (UPSI) whereas 3GPP TS 23.503 [7] uses also Policy Section Identifier (PSI) to denote the same.

3.4 URSP and PDU Session Establishment

A matching URSP rule instructs the UE to establish a PDU Session if the PDU Session is not already established. The UE procedure for associating applications to PDU Sessions based on URSP is described in Section 6.6.2.3 of TS 23.503 [7].

A UE uses the Route Selection Descriptor in the matching URSP rule to determine PDU Session connectivity parameters such as S-NSSAI(s), SSC mode, DNN(s), and PDU Session Type. These parameters enable the UE to determine if the user traffic data can be forwarded through an already established PDU Session or if there is a need to trigger the establishment of a new PDU Session.

If the UE selects a S-NSSAI to serve certain application traffic based on URSP rules or UE Local Configuration, and the selected S-NSSAI is in the Allowed NSSAI list, then the UE includes the selected S-NSSAI in the PDU Session Establishment Request and the AMF uses the received S-NSSAI (and DNN) to select the SMF. If the selected S-NSSAI is neither in the Allowed NSSAI nor in the Rejected NSSAI, but it is in the Configured NSSAI, then the UE can attempt to request the selected S-NSSAI by including it in Requested NSSAI in next Mobility Registration Update. Only if the selected S-NSSAI is included in the Allowed NSSAI in the Registration Accept, then the UE can proceed with the establishment of the PDU Session with this S-NSSAI.

If there is no matching URSP rule and no matching UE Local Configuration, then the UE does not include an S-NSSAI when establishing a PDU Session, even if there are one or more S-NSSAIs in the Allowed NSSAI. In such a case, when establishing a PDU Session, the AMF selects an S-NSSAI from the Allowed NSSAIs as specified in Section 4.3.2.2.1 of 3GPP TS 23.502 [6].

If the UE does not provide a DNN in the PDU Session Establishment Request for a given S-NSSAI, the serving AMF determines the DNN for the requested PDU Session by selecting the default DNN for this S-NSSAI if a default DNN is present in the UE's Subscription Information; otherwise, the serving AMF selects a locally configured DNN for this S-NSSAI (Section 4.3.2.2.1 of 3GPP TS 23.502 [6]).

In the case of network rejection of the PDU Session Establishment Request, the UE shall follow the procedures in Section 6.4.1.4 of 3GPP TS 24.501 [9] and Section 4.2.2.2 of 3GPP TS 24.526 [8] to determine whether to trigger the establishment of a new PDU Session.

3.5 URSP and PDN Connection Establishment in EPS

If a UE does not have preconfigured rules for associating an application to a PDN connection (i.e., the UE does not have rules in UE local configuration), the UE can use a matching URSP rule to derive DNN/APN for PDN Connection establishment as specified in Section 5.17.1.2 of 3GPP Release 16 23.501 [5].

Note: The UE behaviour on EPS regarding UE local configuration differs from the UE behaviour on 5GS. On 5GS, the UE checks first if a non-default URSP rule matches the upper layer request, before checking if a suitable UE Local Configuration exists, see section 3.2.

3.6 Receiving new URSP rules

For those cases when a PDU Session is already established, and the UE receives new URSP rules, then the new URSP rules are to be applied timely, but the UE behaviour is not specified and implementation specific. There is no mechanism to force a UE to release established PDU Sessions in such situations.

Applying new URSP rules by a UE may imply that the association of an application to a PDU Session needs to be updated, and hence connectivity may be broken as traffic needs to be routed to another PDU Session with another IP address. It is UE-specific how quickly this migration is achieved and whether/how the application shall be informed about this.

3.7 Receiving updated Allowed NSSAI and/or Configured NSSAI

AMF updates the UE with the Allowed NSSAI and/or Configured NSSAI for the Serving PLMN as specified in Section 5.15.4 of 3GPP TS 23.501 [5], e.g., when the Subscribed S-NSSAI(s) are updated (i.e., some existing S-NSSAIs are removed and/or some new S-NSSAIs are added) and one or more Subscribed S-NSSAI(s) are applicable to the Serving PLMN the UE is registered in.

The UE may re-evaluate the URSP rules when the allowed NSSAI is changed as specified in Section 4.2.2.2 of 3GPP Release 16 TS 24.526 [8]. There is no mechanism to force a UE to release an established PDU Session if the S-NSSAI used in the PDU session has been removed from the Allowed NSSAI.

If an S-NSSAI is no longer available for a UE, the AMF indicates to the SMF(s) the PDU Session ID(s) corresponding to the S-NSSAI and to release these PDU Session(s) as specified in Section 5.15.5.2.2 of 3GPP TS 23.501 [5].

3.8 Traffic categories

Traffic categories, listed in Table 1, are defined to accommodate connectivity requirements that are shared among different applications traffic.

Traffic Category	Description
IMS	IMS Voice + Video comprising voice, video telephony and multimedia communications over IP networks. Voice, Video and SMS over IMS DNN, as well as RCS (Rich Communication Services) are included in this traffic category.
Internet	Internet data traffic with wide availability but no critical requirements on latency or data rates.
IoT delay-tolerant	Delay-tolerant, low sustained data rate IoT traffic.
IoT non-delay-tolerant	Non-delay-tolerant, low sustained data rate IoT traffic

Downlink streaming	Downlink streaming, characterized as downlink high data rates content and low latency.
Uplink streaming	Uplink streaming, characterized as uplink high data rates content and low latency.
GBR Downlink streaming	Downlink streaming, characterized as downlink high data rates content, low latency and a guaranteed bit rate.
GBR Uplink streaming	Uplink streaming, characterized as uplink high data rates content, low latency and a guaranteed bit rate.
Vehicular Communications/	Vehicle-to-Everything (V2X) traffic comprising V2X messages, characterized by low latency, high reliability, and high availability.
Real time interactive	Real time interactive traffic, for example, for gaming or AR/VR.
Unified Communications	Unified communications traffic, which comprise communications through a single user interface at the UE, for instance instant messaging, VoIP, and video collaboration through the same application.
Background	Any traffic that is not time-sensitive, e.g., firmware/ software updates over the air. This traffic has no critical requirements from latency or data rates perspective. This traffic should/can be subject of scheduling (e.g., at specific time of day) by the applications/networks.
Mission Critical Communications	Mission-critical communications, may include MC-PTT, MC video, and MC data.
Time Critical Communications	Time Critical Communications, with bounded, low to very low latency requirements, and high availability.
Low latency loss tolerant Communications in Unacknowledged Mode	Traffic which has low latency requirements and is tolerant to some loss, hence using un-acknowledged mode at the Radio Link Control (RLC) layer. E.g., for certain real time voice or video traffic.

Table 1: Traffic Categories

Traffic categories have been specified as Connection Capabilities in 3GPP Release 18 TS 23.503 [7] and 3GPP Release 18 TS 24.526 [8].

NOTE: Use cases implemented based on pre-Release 18 capabilities in Traffic Descriptors continue to exist while new use cases can emerge relying upon Traffic Categories based on Release 18.

Table 2 provides example mappings of traffic categories to GSMA-defined NESTs in NG.116 [10]. This table is not meant to recommend or preclude mappings for MNOs' deployments. Particularly, MNOs may choose different mappings than those shown in Table 2, including mappings to MNO-defined NESTs. Also, an MNO may apply different mappings per subscriber by configuring in the RSDs of the URSP rule matching a Traffic Category a different S-NSSAI depending on the subscription.

Traffic Category	NG.116 NEST
IMS traffic	eMBB (Section 4.1)
Unified communications traffic	eMBB (Section 4.1)
Internet traffic	eMBB (Section 4.1)
IoT delay-tolerant	MioT (Section 4.3)
IoT non-delay-tolerant	MioT (Section 4.3)
Downlink streaming	eMBB (Section 4.1)
Uplink streaming	eMBB (Section 4.1)
GBR Downlink streaming	Guaranteed Bit rate Streaming services (Section 4.9)
GBR Uplink streaming	Guaranteed Bit rate Streaming services (Section 4.9)
Vehicular communications	V2X (Section 4.7)
Real time interactive	XR (Section 4.8)
Background	MioT (Section 4.3)
Mission critical communications	Public Safety (Section 4.5)
Low latency loss tolerant communications in un-acknowledged mode	No GSMA-defined NEST
Time critical communications	URLLC (Section 4.2)

Table 2: Example mappings of traffic categories to GSMA-defined NESTs

3.9 URSP and Access traffic routing

Routing policies assist UE in making routing decisions per application or flow using 3GPP access and non-3GPP access over a PDU session, or outside of a PDU session using non-3GPP access between the UE and the data network. These routing policies for UE are configured using URSP, or UE Local Configurations as described in the section 3.2. The traffic using 3GPP access and non-3GPP access over a PDU session with multi access is governed by Access Traffic Sterring, Switching, and Splitting (ATSSS) functionality. The traffic offloaded to non-3GPP access outside of PDU session is controlled by Non-Seamless WLAN Offload (NSWO) functionality, see section 3.2.

Below figure describes high level flow of the UE on how to handle outgoing traffic from different applications or data flows.

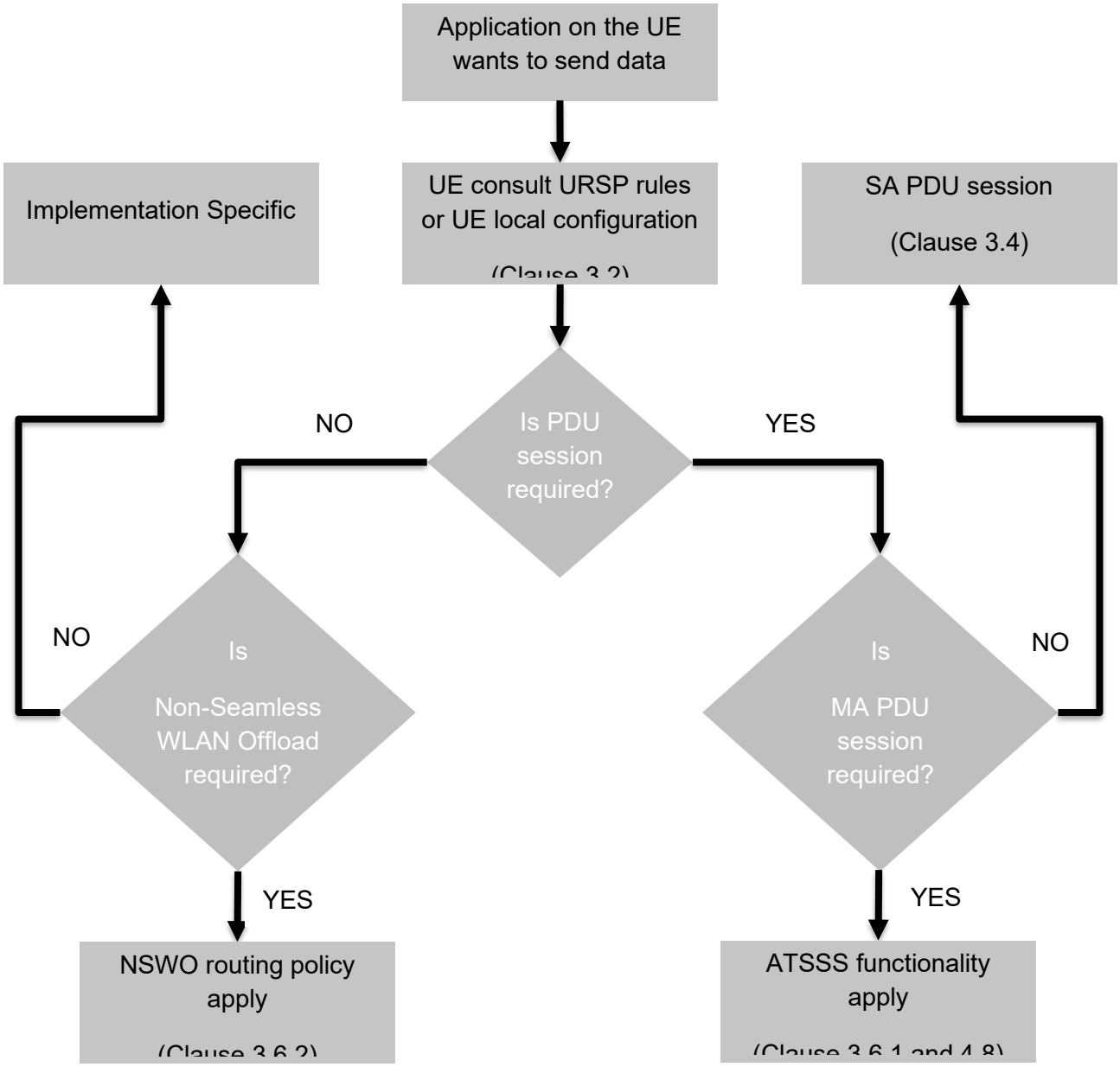

Figure 1: UE in making routing decisions per application or data flow

3.9.1 Traffic routing based on Access Traffic Sterring, Switching, and Splitting

The ATSSS is an optional feature enabling multi-access PDU (MA PDU) connectivity between the UE and the 5G Core to route data traffic across 3GPP access and non-3GPP access networks. The ATSSS feature allows a number of modes for distributing a data flow across these accesses: “steering” chooses one access or the other when data flow starts, “switching” moves a data flow from one access to another, and “splitting” allows simultaneous use of both accesses for a data flow. See 3GPP Release 16 TS 23.501 [5], 3GPP Release 16 TS 23.503 [7] and 3GPP Release 16 TS 24.193 [12] for a detailed description of ATSSS.

The ATSSS functionality is activated when an ATSSS-capable UE requests an MA PDU Session based on the selected URSP rules. More specifically when this URSP rule's Route Selection Descriptor contains an Access Type Preference component indicating "Multi-Access" as described in the 3GPP TS 23.503 [7]. The ATSSS-capable UE shall attempt to establish an MA PDU Session. The UE shall not request for MA PDU Session when either UE or 5GC does not support the ATSSS functionality and shall request a SA PDU session.

During MA PDU session establishment, the PCF configured MA PDU Session Control information in the PCC rules is used by the SMF to create applicable N4 rules for the UPF and ATSSS rules for the UE, as described in clause 5.32.2 of 3GPP TS 23.501 [5]. The ATSSS rules are sent to UE via NAS and N4 rules to UPF via N4.

After the establishment of a MA PDU Session, the UE applies ATSSS rules and considers the local conditions (such as network interface availability, signal loss conditions, user preferences, etc.) for deciding how to distribute the uplink data traffic, as described in clause 5.32.2 of 3GPP TS 23.501 [5]. Similarly, the UPF anchor of the MA PDU Session applies N4 rules and feedback information received from the UE via the user-plane (such as access network Unavailability or Availability) for deciding how to distribute the downlink data traffic, as described in clause 5.32.2 of 3GPP TS 23.501 [5]. Below figure depicts high level ATSSS for uplink (UL) and downlink (DL) traffic and the examples are described in the clause 4.8.

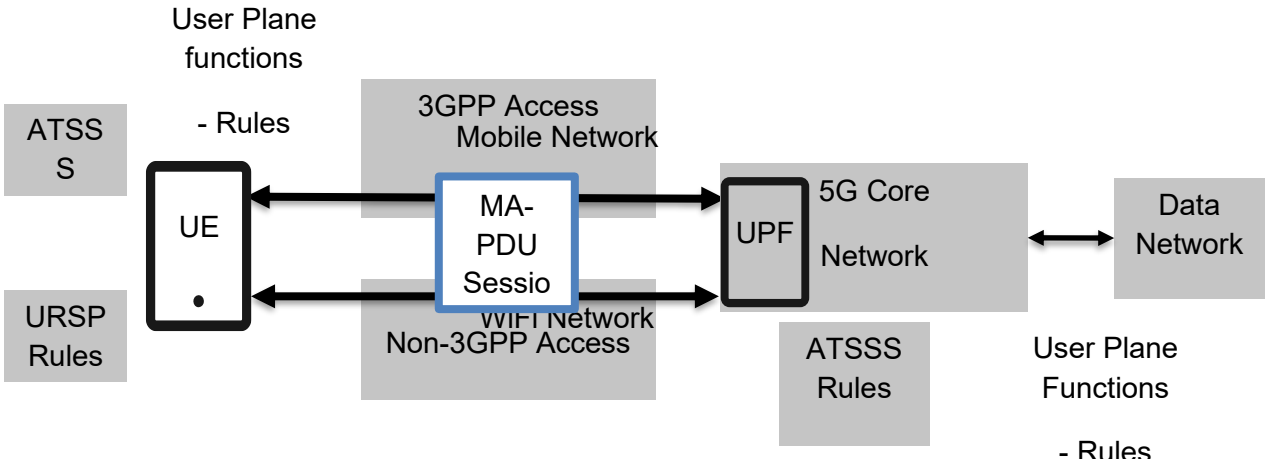

Figure 2: Access Traffic Steering, Switching and Splitting

3.9.2 Traffic routing based on Non-Seamless WLAN offload

Non-Seamless WLAN Offload is an optional capability of a UE supporting WLAN radio access. A UE supporting Non-Seamless WLAN Offload may, while connected to WLAN access (e.g. using 5GS credentials), route specific data flows via the WLAN access without traversing the 5GC. These UE data flows for Non-Seamless WLAN Offload are determined using URSP configuration, or UE Local Configurations as described in the section 3.2. In current version of the document, the NSWO configuration is recommended only in the UE Local configuration, at least for UEs that do not support ATSSS (See Annex C).

The UE may use an Access Network Discovery & Selection policy (ANDSP) to select a WLAN access network to connect for direct traffic offload (i.e. sending traffic to the WLAN

outside of a PDU Session) and for registering to 5GC using the non-3GPP access network selection information as defined in 3GPP TS 23.503 [7]. The ANDSP may be pre-configured in the UE or may be provisioned to UE from PCF. Below figure depicts high level NSWO flow for UL traffic.

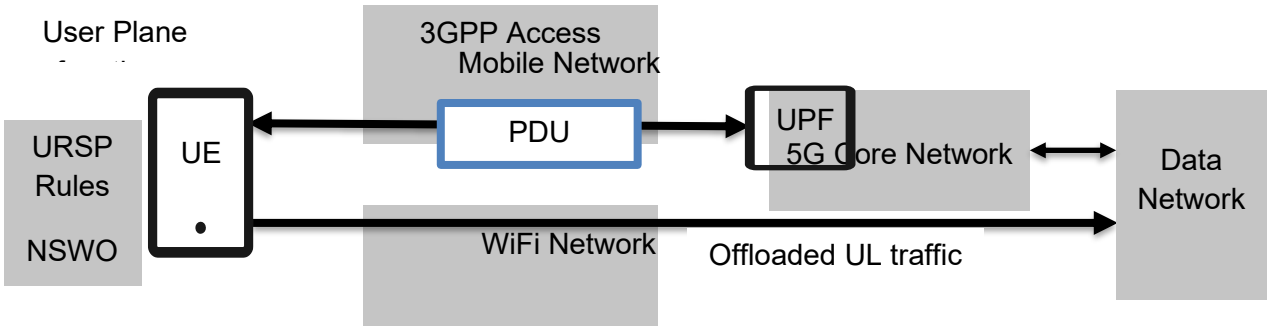

Figure 3: Non-Seamless WLAN Offload

4 Example URSP rule configuration and usage

This section includes several examples for URSP, covering one more PDU Sessions established by an UE on one or more network slices. These examples can also be combined, e.g., it is possible to add a match-all rule to the examples without such a rule.

4.1 Single network slice, single PDU Session

4.1.1 Application Descriptor as Traffic Descriptor

In this use case, the UE has been configured with the following URSP rule (Table 3), using Application Descriptor as Traffic Descriptor. The URSP rule includes DNN selection, Network Slice Selection, and Access Type preference.

Rule Precedence		1
Traffic Descriptor	Application descriptors	“String”
Route Selection Descriptor Precedence		0
Route Selection Descriptor	DNN Selection	DNN_1
	Network Slice Selection	S-NSSAI_X
	Access Type preference	3GPP access

Table 3: URSP rule using Application Descriptor

If the rule is matched, the UE will establish a PDU Session using DNN_1 and S-NSSAI_X on 3GPP access, as shown in Figure 1.

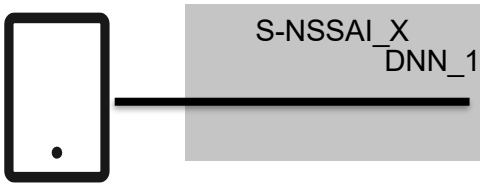

Figure 4: Single PDU Session on a network slice

4.1.2 DNN as Traffic Descriptor

In this use case, the UE has been configured with the following URSP rule (Table 4), using DNN as Traffic Descriptor. The URSP rule includes Network Slice Selection and Access Type preference.

Rule Precedence		1
Traffic Descriptor	DNN	DNN_1
Route Selection Descriptor Precedence		0
Route Selection Descriptor	Network Slice Selection	S-NSSAI_X
	Access Type preference	3GPP access

Table 4: URSP rule using Application Descriptor

If the rule is matched, the UE will establish a PDU session using DNN_1 and S-NSSAI_X on 3GPP access, as shown in Figure 2.

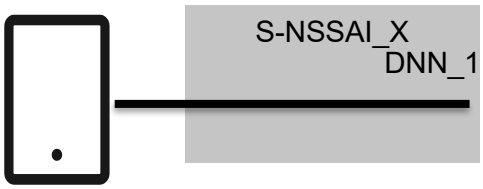

Figure 5: Single Session on a network slice

4.2 Two PDU Sessions

4.2.1 Two PDU Sessions on the same network slice

In this use case, the UE has been configured with the following URSP rules (Table 5), one rule using Application Descriptor as Traffic Descriptor and another rule using DNN as Traffic Descriptor. Both URSP rules have the same S-NSSAI value in Network Slice Selection.

Rule Precedence		0
Traffic Descriptor	Application descriptors	“String”
Route Selection Descriptor Precedence		0
Route Selection Descriptor	DNN Selection	DNN_1
	Network Slice Selection	S-NSSAI_X
	Access Type preference	3GPP access
Rule Precedence		1
Traffic Descriptor	DNN	DNN_2
Route Selection Descriptor Precedence		0
Route Selection Descriptor	Network Slice Selection	S-NSSAI_X
	Access Type preference	3GPP access

Table 5: URSP rule using Application Descriptor

If the first rule is matched, the UE will establish a PDU Session using DNN_1 and S-NSSAI_X on the 3GPP access. If the second rule is matched the UE will establish a PDU Session using DNN_2 and S-NSSAI_X on the 3GPP access as shown in Figure 3.



Figure 6: Two PDU Sessions on the same network slice

4.2.2 Two PDU Sessions on two network slices

In this use case, the UE has been configured with the following URSP rules (Table 6), one rule using Application Descriptor as Traffic Descriptor and another rule using DNN as Traffic Descriptor. The URSP rules have different S-NSSAIs in Network Slice Selection.

Rule Precedence		0
Traffic Descriptor	Application descriptors	“String”
Route Selection Descriptor Precedence		1
Route Selection Descriptor	DNN Selection	DNN_1
	Network Slice Selection	S-NSSAI_X
	Access Type preference	3GPP access
Rule Precedence		1
Traffic Descriptor	DNN	DNN_2
Route Selection Descriptor Precedence		1
Route Selection Descriptor	Network Slice Selection	S-NSSAI_Y
	Access Type preference	3GPP access

Table 6: URSP rule using Application Descriptor

If the first rule is matched, the UE will establish a PDU Session using DNN_1 and S-NSSAI_X on the 3GPP access. If the second rule is matched, the UE will establish a PDU Session using DNN_2 and S-NSSAI_Y on the 3GPP access. Please Figure 4.

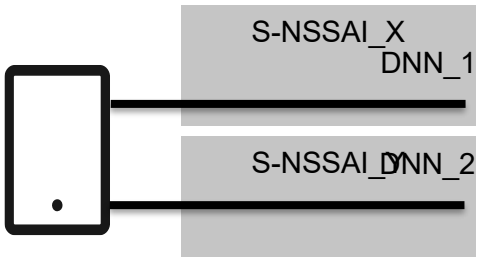

Figure 7: Two PDU Sessions on two network slices

4.3 Three PDU Sessions / two network slices for a NG.114 compliant UE

A UE compliant with GSMA NG.114 [4] uses at least a PDU Session to the IMS well-known DNN and a PDU Session to the HOS DNN. The HOS DNN can be the Internet DNN.

The following exemplifies the use of both IMS and Internet DNNs on the MBB network slice and a third DNN on a different network slice. There are different alternatives on how to address this use case, using:

- local configuration and a URSP rule, or
- only URSP rules.

4.3.1 Using Local configuration and URSP

The UE has local configuration on how to establish the PDU Sessions to the IMS DNN and to the Internet DNN. This local configuration includes the DNN and can include the MBB S-NSSAI to be used for PDU Session Establishment (see also Section 1 on how the AMF selects the S-NSSAI if not provided by the UE). In addition, the UE has been configured with the following URSP rule (see also Section 0), but the UE neither has a URSP rule for the IMS DNN nor for the Internet DNN.

Rule Precedence		1
Traffic Descriptor	Application descriptors	“String”
Route Selection Descriptor Precedence		1
Route Selection Descriptor	DNN Selection	DNN_1
	Network Slice Selection	S-NSSAI_X
	Access Type preference	3GPP access

Table 7: URSP rule using Application Descriptor

If the rule is matched, the UE will establish a PDU Session using DNN_1 and S-NSSAI_X on 3GPP access. The UE uses the local configuration to establish the PDU Sessions to the IMS DNN and to the Internet DNN. Refer to Figure 5.

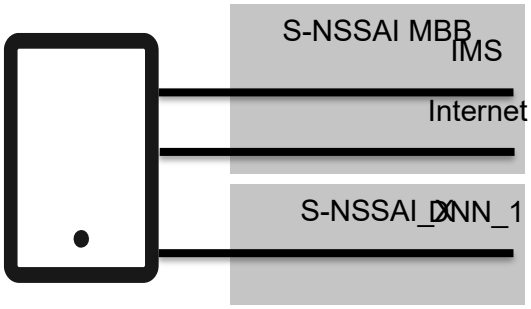

Figure 8: Three PDU Sessions on two network slices

4.3.2 Using only URSP rules

The UE has been configured with the following URSP rules:

- one using Connection Capabilities with value 8 (Internet) as Traffic Descriptor,
- one using Connection Capabilities with value 1 (IMS) as Traffic Descriptor, and
- one using Application Descriptor with value “string” as Traffic Descriptor.

Rule Precedence		0
Traffic Descriptor	Connection Capabilities	8 (Internet)
Route Selection Descriptor Precedence		0
Route Selection Descriptor	DNN Selection	Internet DNN
	Network Slice Selection	S-NSSAI MBB
	Access Type preference	3GPP access
Rule Precedence		1
Traffic Descriptor	Connection Capabilities	1 (IMS)
Route Selection Descriptor Precedence		0
Route Selection Descriptor	DNN Selection	IMS
	Network Slice Selection	S-NSSAI MBB
	Access Type preference	3GPP access
Rule Precedence		2
Traffic Descriptor	Application descriptors	“String”
Route Selection Descriptor Precedence		0
Route Selection Descriptor	DNN Selection	DNN_1
	Network Slice Selection	S-NSSAI_X
	Access Type preference	3GPP access

Table 8: URSP rules using Connection Capabilities and Application Descriptors

If the first rule is matched, the UE will establish a PDU Session using Internet DNN and S-NSSAI MBB on the 3GPP access. If the second rule is matched, the UE will establish a PDU Session using IMS as DNN and S-NSSAI MBB on the 3GPP access. If the third rule is matched, the UE will establish a PDU Session using DNN_1 and S-NSSAI_X on the 3GPP access. Please see also Figure 8.

4.4 Match-all rule (Using only URSP rules)

A UE may be configured with URSP rules containing “match all” Traffic Descriptor.

A URSP rule containing “match all” Traffic Descriptor is regarded as the default URSP rule. If a default URSP rule and one or more non-default URSP rules are included in the URSP, the default URSP rule has the lowest priority (i.e., highest precedence value).

Table 9 shows an example of URSP rules to be added a URSP rule containing “match all” Traffic Descriptor to Table 8. It is noted that the rule precedence value of the rule containing “match all” Traffic Descriptor in this example can be configured as more than 3, which shall be higher than ones of the other rules and be 255 at maximum.

Rule Precedence		0
Traffic Descriptor	Connection Capabilities	8 (Internet)
Route Selection Descriptor Precedence		0
Route Selection Descriptor	DNN Selection	Internet DNN
	Network Slice Selection	S-NSSAI MBB
	Access Type preference	3GPP access
Rule Precedence		1
Traffic Descriptor	Connection Capabilities	1 (IMS)
Route Selection Descriptor Precedence		0
Route Selection Descriptor	DNN Selection	IMS
	Network Slice Selection	S-NSSAI MBB
	Access Type preference	3GPP access
Rule Precedence		2
Traffic Descriptor	Application descriptors	“String”
Route Selection Descriptor Precedence		0
Route Selection Descriptor	DNN Selection	DNN_1
	Network Slice Selection	S-NSSAI_X
	Access Type preference	3GPP access
Rule Precedence		3
Traffic Descriptor	Match all	
Route election Descriptor Precedence		0

Route Selection Descriptor	DNN Selection	Internet DNN
	Network Slice Selection	S-NSSAI MBB
	Access Type preference	3GPP access

Table 9: URSP rules using Connection Capabilities and Application Descriptors

If there are no Traffic Descriptor values corresponding to URSP rules with its precedence 0 through 2 in the values requested by upper layers, the UE tries to use UE Local Configuration for the upper layer request. Then, if neither UE Local Configuration nor the URSP rules are applicable for the applications, the URSP rule containing “match all” Traffic Descriptor is applied (see Section 6.1.2.2.1 of 3GPP TS 23.503 [7] and Section 4.2.2.2 of 3GPP TS 24.526 [8]).

For more details on additional checks necessary before an existing PDU Session can be used, see Section 6.6.2.3 of 3GPP TS 23.503 [7].

The UE may be configured with only URSP rules containing “match all” Traffic Descriptor as described in Table 10. It is noted that the rule precedence value of the rule using match-all in this example can be configured to be 255 at maximum.

Rule Precedence		255
Traffic Descriptor	Match all	
Route Selection Descriptor Precedence		0
Route Selection Descriptor	DNN Selection	Internet DNN
	Network Slice Selection	S-NSSAI MBB
	Access Type preference	3GPP access

Table 10: Only URSP rule using “match all” Traffic Descriptor

4.5 Adding a network slice for a NG.114 compliant UE

A UE compliant to GSMA NG.114 [4] uses at least a PDU Session to the IMS well-known DNN and a PDU Session to the Internet DNN on the MBB network slice.

The following exemplifies the cases that the UE has a gaming application, and the UE is either using a “match all” URSP rule to also route the gaming traffic on the Internet PDU Session or the UE is using a URSP rule by which the gaming traffic is routed to a new PDU Session via a network slice other than MBB.

4.5.1 Using only URSP rules – gaming traffic on the Internet DNN

The UE has been configured with the following URSP rules:

- one using Connection Capabilities with value 8 (Internet) as Traffic Descriptor,
- one using Connection Capabilities with value 1 (IMS) as Traffic Descriptor, and
- one match-all rule.

Rule Precedence		0
Traffic Descriptor	Connection Capabilities	8 (Internet)
Route Selection Descriptor Precedence		0
Route Selection Descriptor	DNN Selection	Internet DNN
	Network Slice Selection	S-NSSAI MBB
	Access Type preference	3GPP access
Rule Precedence		1
Traffic Descriptor	Connection Capabilities	1 (IMS)
Route Selection Descriptor Precedence		0
Route Selection Descriptor	DNN Selection	IMS
	Network Slice Selection	S-NSSAI MBB
	Access Type preference	3GPP access
Rule Precedence		2
Traffic Descriptor	“match all”	
Route Selection Descriptor Precedence		0
Route Selection Descriptor	DNN Selection	Internet DNN
	Network Slice Selection	S-NSSAI MBB
	Access Type preference	3GPP access

Table 11: Two URSP rules using Connection Capabilities and “match all” rule

If the first rule is matched, the UE will establish a PDU Session using Internet DNN and S-NSSAI MBB on the 3GPP access. If the second rule is matched, the UE will establish a PDU Session using IMS as DNN and S-NSSAI MBB on the 3GPP access. If the gaming application is requesting the connection capability “real time interactive”, then no rule is matched and instead the “match all” rule is used, and the UE will route all traffic of the gaming application via the already established PDU Session using Internet DNN and S-NSSAI MBB on the 3GPP access. Hence the UE uses only two PDU Sessions. See also Figure 6.

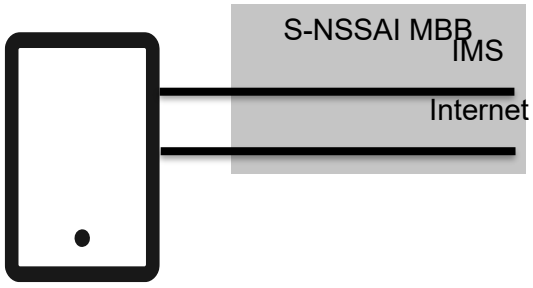

Figure 9: Two PDU Sessions on one network slice

4.5.2 Using only URSP rules – gaming traffic on the Gaming DNN

If the subscription is changed to include a Gaming DNN and an S-NSSAI to be used for gaming, e.g., if the subscriber has bought a corresponding upgrade from the MNO, then the UE receives an additional URSP rule as shown in Table 12. Details on how to acquire such an upgrade are out of the scope of this document.

After receiving new URSP rules, the UE has been configured with the following URSP rules:

- one using Connection Capabilities with value 8 (Internet) as Traffic Descriptor,
- one using Connection Capabilities with value 1 (IMS) as Traffic Descriptor,
- one using Connection Capabilities with value 166 (real time interactive) as Traffic Descriptor, and
- one match-all rule.

Rule Precedence		0
Traffic Descriptor	Connection Capabilities	8 (Internet)
Route Selection Descriptor Precedence		0
Route Selection Descriptor	DNN Selection	Internet DNN
	Network Slice Selection	S-NSSAI MBB
	Access Type preference	3GPP access

Rule Precedence		1
Traffic Descriptor	Connection Capabilities	1 (IMS)
Route Selection Descriptor Precedence		0
Route Selection Descriptor	DNN Selection	IMS
	Network Slice Selection	S-NSSAI MBB
	Access Type preference	3GPP access
Rule Precedence		2
Traffic Descriptor	Connection Capabilities	166 (Real-time interactive)
Route Selection Descriptor Precedence		0
Route Selection Descriptor	DNN Selection	Gaming
	Network Slice Selection	S-NSSAI Gaming
	Access Type preference	3GPP access
Rule Precedence		3
Traffic Descriptor	“match all”	
Route Selection Descriptor Precedence		0
Route Selection Descriptor	DNN Selection	Internet DNN
	Network Slice Selection	S-NSSAI MBB
	Access Type preference	3GPP access

Table 12 : rules using Connection Capabilities and “match all” rule

The UE behaviour is not specified in case of receiving new URSP rules, leaving it implementation specific. See also Section 3.6. However, once the UE has applied the new URSP rules, and the gaming application is requesting the connection capability “real time interactive”, then the UE has in addition to the two PDU Sessions on the MBB network slice also a PDU Sessions on the gaming network slice as shown in Figure 7.

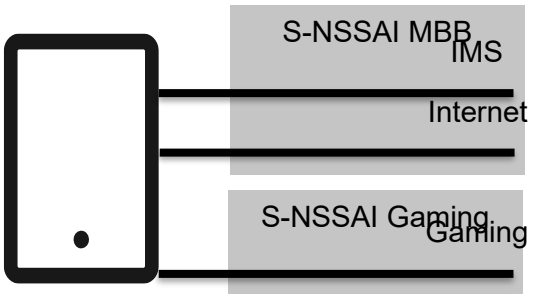

Figure 10: Three PDU Sessions on two network slices, one for MBB and one for gaming

This example can be modified for Mission Critical Communication; in that case the UE is configured with the following URSP rules:

- one using Connection Capabilities with value 8 (Internet) as Traffic Descriptor,
- one using Connection Capabilities with value 1 (IMS) as Traffic Descriptor,
- one using Connection Capabilities with value 169 (Mission critical communications) as Traffic Descriptor and a DNN for Mission Critical Communication in the Route Selection Descriptor, and
- one match-all rule.

Note: Other examples can also be modified for Mission Critical Communication and other use cases.

4.6 Removing a network slice for a UE

The following exemplifies the case that the UE has a gaming application, and the UE is using a URSP rule by which the gaming traffic is routed to a new PDU Session via a network slice other than MBB, see also Section 4.5. At a certain point in time, the network slice and the DNN used for the gaming traffic are removed from the subscription. The trigger for removing the network slice and the DNN from the subscription is out of the scope of this document.

If the subscription is changed to remove both the Gaming DNN and the Gaming S-NSSAI, then the URSP rules are updated to exclude the URSP rule using Gaming S-NSSAI and Gaming DNN. The UE also receives updated Configured NSSAI and/or updated Allowed NSSAI, see Section 3.7.

After receiving new URSP rules, the UE is configured with the following URSP rules:

- one using Connection Capabilities with value 8 (Internet) as Traffic Descriptor,
- one using Connection Capabilities with value 1 (IMS) as Traffic Descriptor, and

- one match-all rule.

Rule Precedence		0
Traffic Descriptor	Connection Capabilities	8 (Internet)
Route Selection Descriptor Precedence		0
Route Selection Descriptor	DNN Selection	Internet DNN
	Network Slice Selection	S-NSSAI MBB
	Access Type preference	3GPP access
Rule Precedence		1
Traffic Descriptor	Connection Capabilities	1 (IMS)
Route Selection Descriptor Precedence		0
Route Selection Descriptor	DNN Selection	IMS
	Network Slice Selection	S-NSSAI MBB
	Access Type preference	3GPP access
Rule Precedence		2
Traffic Descriptor	“match all”	
Route Selection Descriptor Precedence		0
Route Selection Descriptor	DNN Selection	Internet DNN
	Network Slice Selection	S-NSSAI MBB
	Access Type preference	3GPP access

Table 13: Two URSP rules using Connection Capabilities and “match all” rule

As described in Section 3.6, when a PDU Session is already established, and the UE receives new URSP rules, then the new URSP rules are to be applied timely, but the UE behaviour is not specified and implementation specific. There is no mechanism to force a UE to release

established PDU Sessions in such situations; actually, the UE behaviour is not specified, leaving it implementation specific.

As described in Section 3.7, when a PDU Session is already established, and the UE receives updated Allowed NSSAI, then the UE may re-evaluate the URSP rules, but the UE behaviour is not specified and implementation specific. There is no mechanism to force a UE to release an established PDU Session in such situations.

During the subsequent registration procedure or during the subsequent UE Configuration Update procedure, the UE will also receive Allowed NSSAI which does not include the Gaming S-NSSAI. If the Gaming S-NSSAI is no longer available for a UE, the AMF indicates to the SMF to release the corresponding PDU Session. Thereafter the UE has only two PDU Session left, see also Figure 8. If there is further traffic from the gaming application, then the “match all” rule is matched, and the traffic is routed via the already established PDU Session to the Internet DNN.

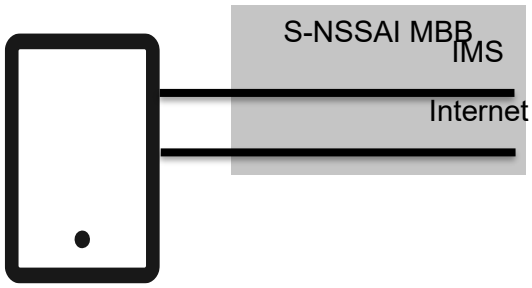

Figure 11: Two PDU Session on one network slice

4.7 Operator specific connection capability

A UE may be configured with URSP rules using operator-specific values as Connection Capabilities in Traffic Descriptor.

While the format and values of Connection Capabilities in Traffic Descriptors to match against standardized traffic categories are defined in TS 24.526 [8] according to the requirements in Section 3.7, the reserved values of Connection Capabilities to match operator-specific traffic categories are in the range [32..160] as specified in TS 24.526 [8]. However, operator specific traffic category values are out of the scope of 3GPP specifications and are used by each operator to classify traffic based on their own criteria.

Therefore, one possible use case would involve an operator determining the values and making an agreement to use the values with an enterprise customer who provides a service and an application in a B2B scenario. Subsequently, the enterprise customer would develop an application that requests the relevant value. The Operating System (OS) in the UE implements specific capability constants to utilize operator specific connection capabilities as an OS-specific API. The application can then make a connection request to the OS, including the corresponding specific capability constant.

An enterprise customer of an operator could also assign the same value of Connections Capabilities to multiple applications.

Table 17 shows an example of a URSP rule using operator specific connection capability.

Rule Precedence		0
Traffic Descriptor	Connection Capabilities	32 (Operator specific connection capability)
Route Selection Descriptor Precedence		0
Route Selection Descriptor	DNN Selection	DNN_1
	Network Slice Selection	S-NSSAI_Y
	Access Type preference	3GPP access

Table 14: URSP rules using operator specific connection capabilities

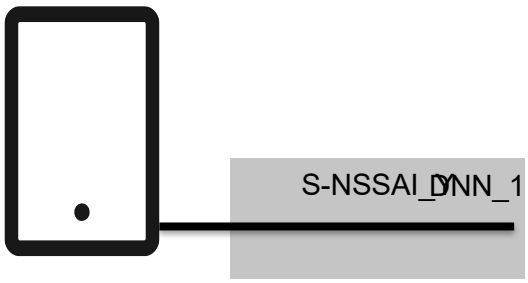

Figure 12: Single PDU Session on a network slice

4.8 Access traffic routing

The URSP rules assist a UE in making routing decisions whether or not to use a MA PDU session for a specific application or flow, including selecting appropriate DNN/Slice. On the other hand, ATSSS helps in managing data flow transmission within an MA PDU when multiple access networks (like 3GPP and non-3GPP) are available, and including in determining whether to split or steer traffic across these different access networks. The detailed rules and procedures combining URSP and ATSSS provides an opportunity to operators and UEs to have granular level control for supporting different multi access use cases. The comprehensive rules ensure URSP and ATSSS to operate in tandem to cater the need of next generation applications to provide better user experience by selecting best access network among different networks, seamless traffic handover between two different access networks, and aggregation of different networks to split the traffic across them.

4.8.1 All applications traffic served via ATSSS

A UE may be configured with only one URSP rules containing “match all” as Traffic Descriptor. The URSP rule includes DNN selection, Network Slice Selection, PDU Session Type Selection, and Multi-Access preference. It is noted that the rule precedence value of the rule containing “match all” Traffic Descriptor in this example can be configured to be 255 at maximum.

Rule Precedence		255
Traffic Descriptor	match all	
Route Selection Descriptor Precedence		0
Route Selection Descriptor	DNN Selection	DNN_1
	Network Slice Selection	S-NSSAI_X
	PDU Session Type Selection	IPv4
	Multi-Access preference	Present

Table 15: URSP rules using only one “match all” rule

The UE is provisioned with only default URSP rule and when any application requests a network connection, the UE establishes (if not already established) a MA PDU Session with DNN_1 and S-NSSAI-X over both 3GPP access and non-3GPP access. ATSSS rules are delivered to the UE via NAS signalling during MA PDU session establishment. After that, the UE routes the uplink traffic of any application using this MA PDU Session by using the received ATSSS rules. Below figure depicts example in detail.

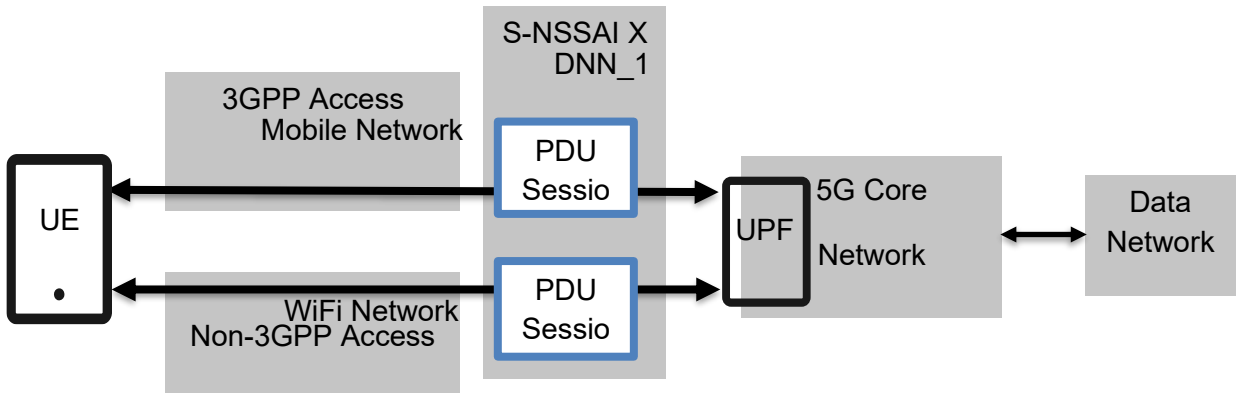

Figure 13: Single MA PDU session on a network slice

4.8.2 Selected application traffic served via ATSSS

A UE may be configured with two URSP rules, one rule using “Application Descriptor” as Traffic Descriptor and another rule using “Match all” as Traffic Descriptor. The URSP rules have different S-NSSAIs in Network Slice Selection. The URSP rule 1 includes DNN selection, Network Slice Selection, PDU Session Type Selection, and Multi-Access preference. Another URSP rule includes DNN selection, Network Slice Selection, PDU Session Type Selection, and Access Type preference. It is noted that the rule precedence value of the rule containing “match all” Traffic Descriptor in this example can be configured to be 255 at maximum.

Rule Precedence		0
Traffic Descriptor	Application descriptors	APP1
Route Selection Descriptor Precedence		0
Route Selection Descriptor	DNN Selection	DNN_1
	Network Slice Selection	S-NSSAI_X
	PDU Session Type Selection	IPv4
	Multi-Access preference	Present
Rule Precedence		255
Traffic Descriptor	match all	
Route Selection Descriptor Precedence		0
Route Selection Descriptor	DNN Selection	DNN_2
	Network Slice Selection	S-NSSAI_Y
	PDU Session Type Selection	IPv4
	Access Type preference	3GPP access

Table 16: URSP rules using Application Descriptor and “match all” rule

The UE is provisioned with one non-default URSP rule and one default URSP rule.

When APP1 application requests a network connection and URSP rule 1 is matched, the UE establishes (if not already established) a MA PDU Session with DNN_1 and S-NSSAI-X over both 3GPP access and non-3GPP access. ATSSS rules are delivered to the UE via NAS signalling during MA PDU session establishment. After that, the UE routes the uplink data traffic of APP1 using this MA PDU Session by using the received ATSSS rules.

When any other application requests a network connection and no rule is matched and instead the “match all” rule is used, the UE establishes (if not already established) a PDU Session with DNN_2 and S-NSSAI-Y over 3GPP. After that, the UE routes the uplink data traffic of any other application using this PDU Session. Below figure depicts example in detail.

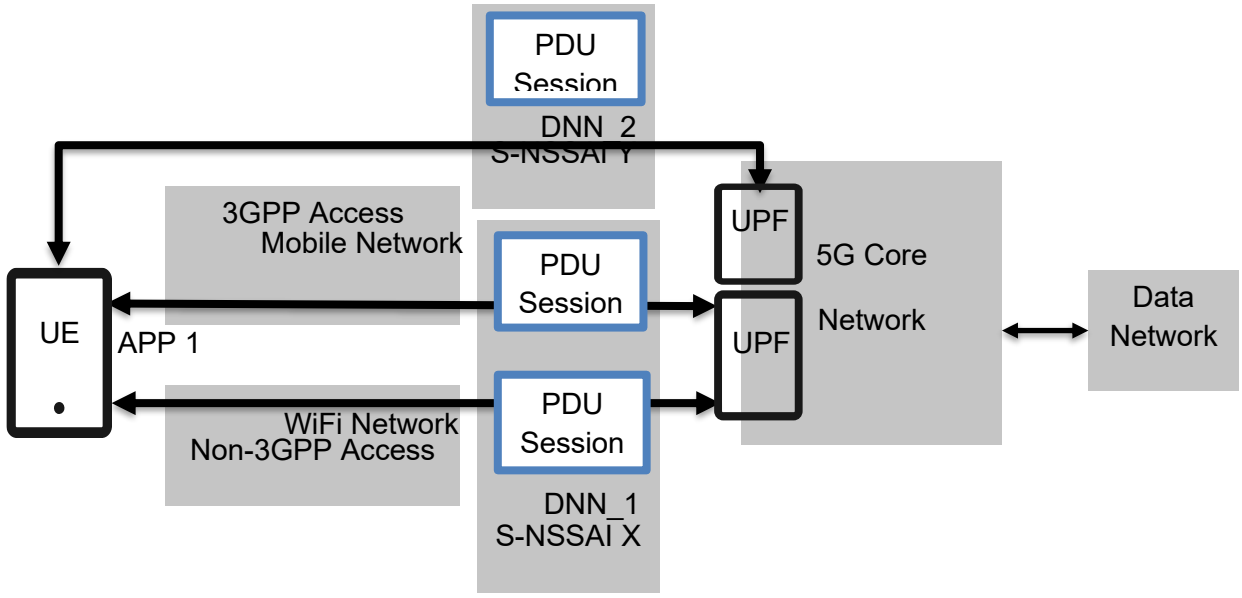

Figure 14: Two PDU sessions, on two network slices

Annex A An Example of application class mapping to traffic categories

Table 17 provides an example of mapping of typical application classes to one or more traffic categories. Table 17 is informative.

An application may use one or many traffic categories depending on the target connectivity requirements for the application data exchange via a network. An application may use more than one traffic category when requesting connectivity for data exchange. The application may also issue more than one request for connectivity, each request associated with a different traffic category.

Application classes	*IMS traffic*	*Internet traffic*	*IoT delay-tolerant*	*IoT non-delay-tolerant*	*Downlink streaming*	*Uplink streaming*	*Vehicular communications*	*Real time interactive*	*Unified communications traffic*	*Mission critical communications*	*Low latency loss tolerant communications in un-acknowledged mode*	*Time critical communications*
Email clients	-	Y	-	-	-	-	-	-	-	-	-	-
Browsers	-	Y	-	-	Y	Y	-	-	-	-	Y	-
IMS voice/video call	Y	-	-	-	-	-	-	-	-	-	-	-
Utility meters, e.g., water meter, electric meter	-	-	Y	-	-	-	-	-	-	-	-	-
Safety alarms, e.g., fire alarm, gas leak alarm	-	-	-	Y	-	Y	-	-	-	-	Y	Y
General health monitors, e.g., smart wearables	-	-	Y	-	-	-	-	-	-	-	-	-
Medical grade health monitors, e.g., heart rate monitor or blood pressure monitor	-	-	-	Y	-	Y	-	-	-	-	Y	Y
Environmental sensors, e.g., pollution monitors, anemometers, or temperature gauge	-	-	Y	-	-	-	-	-	-	-	-	-
V2X safety applications	-	-	-	-	-	-	Y	-	-	-	Y	Y
V2X telematics	-	-	-	Y[1]	-	-	-	-	-	-	-	-
In-vehicle infotainment,		Y	-	-	Y	Y	-	-	-	-	-	-
Audio/video streaming	-	Y	-	-	Y	-	-	-	-	-	-	-
Live event sharing e.g., sports matches, weddings	-	Y	-	-	-	Y	-	-	-	-	Y	-
IP voice/video calls without need for seamless handover, e.g., using over-the-top applications.	-	-	-	-	-	-	-	-	Y	-	-	-
Instant information exchange requiring real-time response	-	-	-	-	-	-	-	Y	-	-	-	-
Messaging without need for real-time response	-	Y	-	-	-	-	-	-	Y	-	Y	-
First Responder applications (police, ambulance, fire, etc.)	Y	Y	-	-	-	-	-	-	-	Y	-	Y
Internet radio applications	-	Y	-	-	Y	-	-	-	-	-	-	-
Cloud-linked productivity applications (e.g., document editors, audio editors, or video editors)	-	Y	-	-	-	-	-	-	-	-	-	-
Real-time gaming	-	-	-	-	-	-	-	Y	-	-	-	Y
Extended reality/augmented reality/virtual reality	Y	-	-	-	-	-	-	Y	-	-	-	Y

Table 17: Example of Traffic category mapping to typical application classes

[1] For services such as diagnostic reporting, i.e., not directly related to immediate safety or vehicle driveability.

Annex B Guidance for ecosystem with use of network slicing

This Annex provides guidance information for application developers and application publishers to share information that can be useful for an MNO for configuring network slices. While application developers might indicate via OS APIs what traffic categories are suitable for the application traffic (see Section 3.8), it is the MNO that decides which traffic categories (see 3GPP Release 18 TS 23.503 [7]) are actually supported in its network.

B.1 Information to support application developers

OS vendors define APIs to enable applications to request network connections, where a request may contain information relevant for selection of a specific traffic category (see also Section 3.2). For further details, see GSMA PRD TS.62 [19].

Information about the traffic categories that an application would like to use may be found in the application itself (e.g., as part of the meta information bundled with application code) and/or listed in repositories/portals from where users can download and install application(s).

B.2 Information to support MNO

Whilst application developers may determine the traffic categories that are best suited for an application based on a specific use case, e.g., browsing, streaming, or voice calls, the MNO determines the network slice characteristics. To assist MNOs to configure the network slices that benefit actual applications, it is useful for MNOs to have information on the traffic categories used in the connection requests from the OS.

Annex C Recommendation for usage of UE local configuration

This Annex provides guidance on how MNOs utilize UE local configuration as described in Section 3 of this document.

The use of UE local configuration for establishing a PDU session in 5GS or PDN connection in EPS is deprecated. Instead, it is recommended that UEs should be provisioned with a default URSP rule, which comes into play when no non-default URSP rule is matched.

For the purpose of Non-Seamless WLAN Offload, it is recommended to rely on UE local configuration rather than URSP. In particular, it is recommended that route selection descriptors do not contain non-seamless non-3GPP offload indication.

Note: Simultaneous support of Non-Seamless WLAN Offload and ATSSS is not fully documented in this version of the document.

Document Management

Document History

Version	Date	Brief Description of Change	Approval Authority	Editor / Company
1.0	04 June 2024	NG.141 CR1001	ISAG	Ralf Keller, Ericsson
2.0	15 October 2024	NG.141 CR1002 NG.141 CR1003 NG.141 CR1004 NG 141 CR1006 NG.141 CR1007 NG.141 CR1008 NG.141 CR1009 NG.141 CR1010 NG.141 CR1011 NG.141 CR1012	ISAG	Ralf Keller, Ericsson
3.0	26 February 2025	NG.141 CR1014	ISAG	Ralf Keller, Ericsson
4.0	27 October 2025	NG.141 CR1015 NG.141 CR1016 NG.141 CR1017 NG.141 CR1018	ISAG	Ralf Keller, Ericsson

Other Information

Type	Description
Document Owner	URSPG
Editor / Company	Ralf Keller, Ericsson

It is our intention to provide a quality product for your use. If you find any errors or omissions, please contact us with your comments. You may notify us at prd@gsma.com

Your comments or suggestions & questions are always welcome.