

NG.143 5G SA Roaming Testing
Version 1.0
27 Jan 2025

Security Classification: Confidential

Access to and distribution of this document is restricted to the persons permitted by the security classification. This document is subject to copyright protection. This document is to be used only for the purposes for which it has been supplied and information contained in it must not be disclosed or in any other way made available, in whole or in part, to persons other than those permitted under the security classification without the prior written approval of the Association.

Copyright Notice

Copyright © 2025 GSM Association

Disclaimer

The GSMA makes no representation, warranty or undertaking (express or implied) with respect to and does not accept any responsibility for, and hereby disclaims liability for the accuracy or completeness or timeliness of the information contained in this document. The information contained in this document may be subject to change without prior notice.

Compliance Notice

The information contain herein is in full compliance with the GSMA Antitrust Compliance Policy.

This Permanent Reference Document has been developed and is maintained by GSMA in accordance with the provisions set out in GSMA AA.34 - Policy and Procedures for Official Documents.

Table of Contents

1 Introduction 3
1.1 Scope of document 3
1.2 Test objectives 3
1.3 Definition of Terms 4
1.4 Document Cross-References 5
1.5 Roaming Interfaces 5
2 Requirements for Testing 7
2.1 Overview 7
2.2 Test Configuration 8
2.2.1 Service based 5G Roaming Configuration 8
2.2.2 EPS Fallback 9
2.2.3 Emergency Call in 5GS/ EPS Fall back 9
2.2.4 SMS over NAS Configuration 10
2.2.5 SMS over IP Configuration 10
2.3 Prerequisites for the Network Entities 11
2.3.1 Prerequisite of the Visited Network Entities 11
2.3.2 Additional prerequisite for Emergency Call testing 12
2.3.3 Prerequisites for SMS over NAS Testing 12
2.3.4 Prerequisites for SMS over IP Testing 13
2.3.5 Prerequisites for Data Testing 13
2.4 User Equipment 13
2.5 Test Equipment 13
3 Test Cases 14
3.1 5G SA BASIC TEST CASES 14
3.1.1 5G SA only registration 14
3.1.2 5G SA Data Service 15
3.1.3 5G SA DATA Cancel Location Test 15
3.1.4 5G Operator Determined Barring 16
3.2 VOICE CALL SERVICE TEST CASES 17
3.2.1 VoNR- UE1 (a) Calls UE2 (a), Both Roamed in VPMN (b) 17
3.2.2 EPS Fallback Mobile Originating and Terminating Voice Calls 18
3.3 SMS TEST CASES 18
3.3.1 SMS over non-access stratum (NAS) (Mobile Originated and Mobile Terminated) 18
3.3.2 SMS Over IP (Mobile Originated and Mobile Terminated) 19
3.4 EMERGENCY TEST CASES 19
3.4.1 UE Detectable Emergency call Over NR 20
3.4.2 Non-UE Detectable Emergency call Over NR 21
3.4.3 UE Detectable Emergency call EPS Fallback 21
3.4.4 Non-UE Detectable Emergency call EPS Fallback 22

1 Introduction

1.1 Scope of document

This document is the specification of the end-to-end functional capability tests for 5G SA Roaming as defined in GSMA PRD NG.113 [3], relating to the international roaming of a User Equipment (UE), belonging to a home Public Mobile Network (HPMN) (a), to and within a visited PMN (VPMN) (b).

Whilst it is expected that roaming will be a bilateral activity between two PMNs, please note that this document is written in a unidirectional context. Hence roaming is taking place by a UE (a) to VPMN (b) only. There is no reference to a UE (b) visiting PMN (a).

To complete the Networks Group (NG) end-to-end functional capability tests for bilateral roaming, it is necessary to perform the tests in this document twice: In the second time the real identities of PMN (a) and PMN (b) are swapped.

GSMA IREG Permanent Reference Document (PRD) IR.23 [1] defines the scope and purpose of each stage of testing.

This document does not cover:

- N32 interface detailled Testing
- Exchange of PMN numbering, addressing and routing data [see Stage 2: GSMA PRD IR.23 [1]
- Testing of Billing and Charging Evolution (BCE), billing applications and any inter-PMN financial statement; defined in PRD TD.207 [8]. However, the production of a charging record file, to use in the charging testing is included.

Note: This PRD is the 5G SA evolution reusing partly some tests already defined in IR.25 for the IMS Voice/SMS tests, and in IR.38 for registration and data services.

1.2 Test objectives

The fundamental objective of this testing is to confirm the capability, and sample the quality of 5G SA Roaming services that mobile users will receive when roaming from their HPMN (a) to VPMN (b) in 5G SA. Consequently, the tests are restricted to top-level capability testing. This does not include any adverse or unexpected behavior testing: this type of testing forms part of the Stage 1 testing [see GSMA PRD IR.23 [1].

Because the testing is at a top-priority, its scope includes checking the correct working of user features and any network features required by the HPMN.

The overall objective of the tests is to confirm that the functions and features, which are already known to operate correctly within each separate PMN, will also operate correctly for Inter-PMN roaming.

In addition to the handling of the tests itself the collection/comparison of charging information respective the generation of charging detailed records (CDR) is described.

The specific objectives are to prove that:

- "Registration" can be successfully completed for the UE (a) roaming to a VPMN (b).
- Outgoing data sessions can be handled by the HPMN (a) and the VPMN (b).
- Incoming and Outgoing speech calls can be handled by the HPMN (a) and the VPMN (b), including Emergency calls.
- Short Message Service is available between Home Country Service Centre and roamed mobile station.

The actual number of repetitions of the test cases is for bilateral agreement between the HPMN and VPMN. In order to maximize the efficiency of testing, the test cases have been specified to minimize the requirement for simultaneous joint activity by both PMN (a) and PMN (b). This concerns mainly the administration of mobile subscriber data in the UDM.

Accordingly, the program of testing forms three distinct components:

a) HPMN(a) issues pre-programmed USIMs and programmes UDM
b) VPMN(b) performs tests or HPMN(a) using roaming end to end testing platform covering visited network.

Note: Emergency Service access is always tested by VPMN(b) using procedures defined by local authorities

c) VPMN(b) and HPMN(a) discuss results

An associated optional objective is to use the charging function of the VPMN to generate a live data file, which is used by the charging testing. After transfer to the HPMN, the HPMN may use the information from the test results to validate the details of the charging tickets, however this is not part of the GSMA network roaming testing.

1.3 Definition of Terms

Acronym	Description
3GPP	3rd Generation Partnership Project
5GC	5G Core Network
5GS	5G System
AMF	Access and Mobility Management Function
AUSF	Authentication Server Function
APN	Access Point Name
DNN	Data Network Name
DNS	Domain Name System
EPC	Evolved Packet Core
EPS	Evolved Packet System (Core)
E-UTRAN	Evolved Universal Terrestrial Radio Access Network
FQDN	Fully Qualified Domain Name
GTP	GPRS Tunnelling Protocol
HPMN	Home Public Mobile Network
HR	Home Routed
HSS	Home Subscriber Server

HTTP	Hyper-Text Transfer Protocol
IPX	Internet packet Exchange
iSEPP	initiating Security Edge Protection Proxy
LBO	Local Break Out
LTE	Long Term Evolution (Radio)
MAP	Mobile Application Part (protocol)
MME	Mobility Management Entity
MNC	Mobile Network Code
MNO	Mobile Network Operator
NR	New Radio (5G)
PGW	PDN (Packet Data Network) Gateway
QCI	QoS Class Identifier
QoS	Quality of Service
RAN	Radio Access Network
RAT	Radio Access Technology
SEPP	Security Edge Protection Proxy
SMF	Session Management Function
SGW	Serving Gateway
UDM	Unified Data Management
UDR	Unified Data Repository
UE	User Equipment
UPF	User Plane Function
URSP	UE Route Selection Policy
USIM	Universal Subscriber Identity Module

1.4 Document Cross-References

Ref	Document Number	Title
1	GSMA PRD IR.23	Organisation of GSM International Roaming Tests
2	GSMA PRD IR.25	VoLTE Roaming Testing
3	GSMA PRD NG.113	5G Roaming Guidelines
4	GSMA PRD IR.65	IMS Roaming and Interworking Guidelines
5	3GPP TS 23.503	General Packet Radio Service (GPRS); Service description; Stage 2
6	3GPP TS 29.503	Domain Name System Procedures; Stage 3
7	GSMA PRD IR.88	EPS Roaming Guidelines
8	GSMA PRD TD.207	Billing and Charging Evolution (BCE) Testing

1.5 Roaming Interfaces

Network Functions	Ref Point ID	Service Definition	Used for LBO, HR, or LBO & HR

AMF – UDM	N8	3GPP TS 29.503 [11] and 3GPP TS 29.518 [12]	LBO & HR
SMF – UDM	N10	3GPP TS 29.503 [11]	LBO
AMF – AMF	N14	3GPP TS 29.518 [12]	LBO & HR, at Inter-PMN mobility
AMF – AUSF	N12	3GPP TS 29.509 [13]	LBO & HR
vSMF – hSMF	N16	3GPP TS 29.502 [14]	HR
SMSF – UDM	N21	3GPP TS 29.503 [11]	LBO & HR
vPCF – hPCF	N24	3GPP TS 29.513 [15]	LBO & HR
vNRF – hNRF	N27	3GPP TS 29.510 [16]	LBO & HR
vNSSF – hNSSF	N31	3GPP TS 29.531 [17]	LBO & HR; see also Note 2
SEPP – SEPP	N32-c N32-f	3GPP TS 29.573 [10]	LBO & HR
vUPF – hUPF	N9	3GPP TS 29.281 [18] This is the User Plane interface so not part of the 5GC Service Based Architecture control plane solution	HR

Relevant inter-PMN interfaces for 5GC roamin

2 Requirements for Testing

2.1 Overview

The test cases are as follow and consists of 5G SA - only services for UE (a) roaming to VPMN (b) and EPS Fallback between UE1 (a) and UE2 (a) roaming to VPMN (b),

1. Basic Service (Registration and data service)
   - Registration and Attach over N32
   - 5G SA Data Service
   - 5G SA Cancel Location
   - 5G SA Operator Determined Barring

2. Voice Service
   - Voice Over NR Originating and Terminating calls
   - EPS Fallback Mobile Originating Terminating Voice Call

3. Short Message Service (Point to point)
   - SMSoNAS in SMSF– Mobile Originated and Terminated SMS
   - SMS Over IP – Mobile Originated and Terminated SMS

4. Emergency Service
   - UE Detectable Emergency Call Over NR
   - Non-UE Dectectable Emergency Call Over NR
   - UE Detectable Emergency Call EPS Fallback
   - Non-UE Dectectable Emergency Call EPS Fallback

Each operator has to make sure that the Data Network Name (DNN) resolution algorithms are implemented correctly in their SMF (Session Management Function) according to GSMA PRD NG.113 [3].

2.2 Test Configuration

2.2.1 Service based 5G Roaming Configuration

The test configuration for 5G Roaming using N32 interface is specified below.

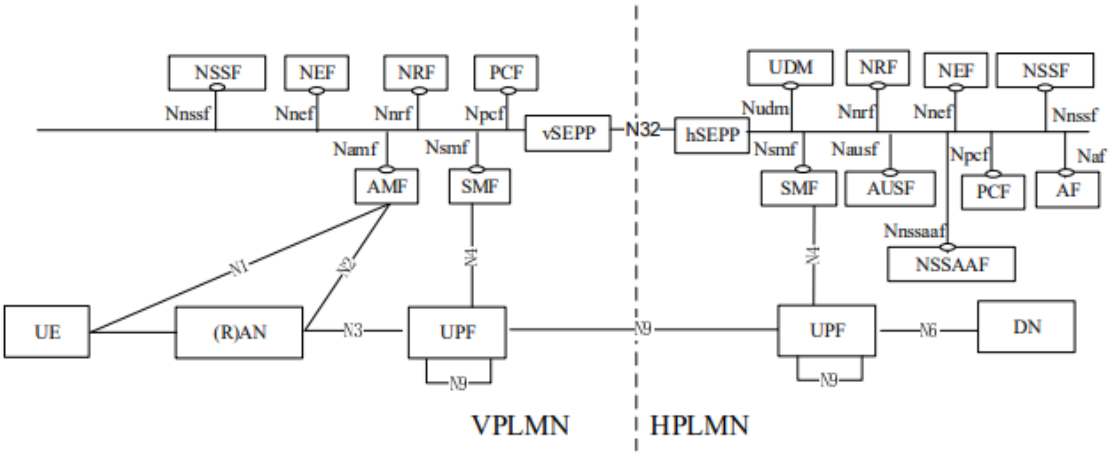

Figure 2.2.1-1: Roaming 5G System architecture - home routed scenario in service-based interface representation - N9 home routing (N9HR)

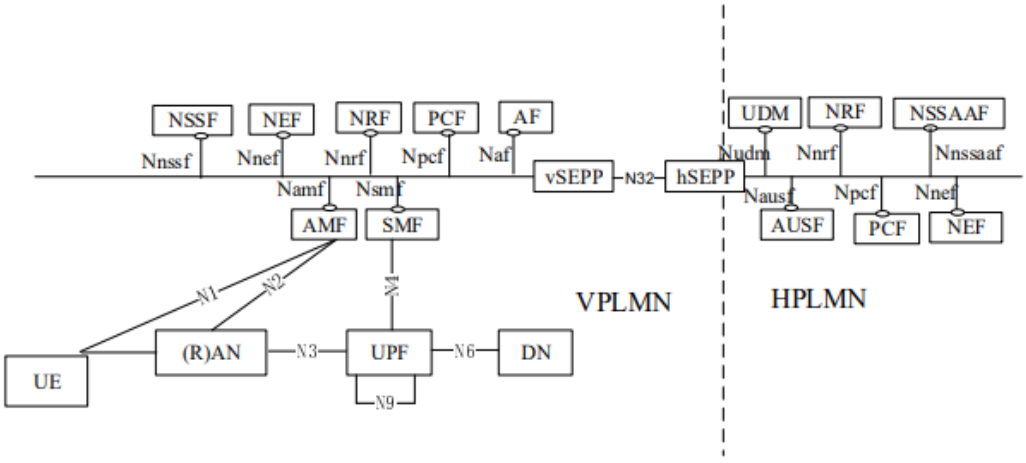

Figure 2.2.1-2: Roaming 5G System architecture- local breakout scenario in service-based interface representation

Note:

All data sessions are based on Home Routing (HR). No LBO cases are tested in this version except local emergency session.

2.2.2 EPS Fallback

The test configuration for EPS Fallback is specified below.

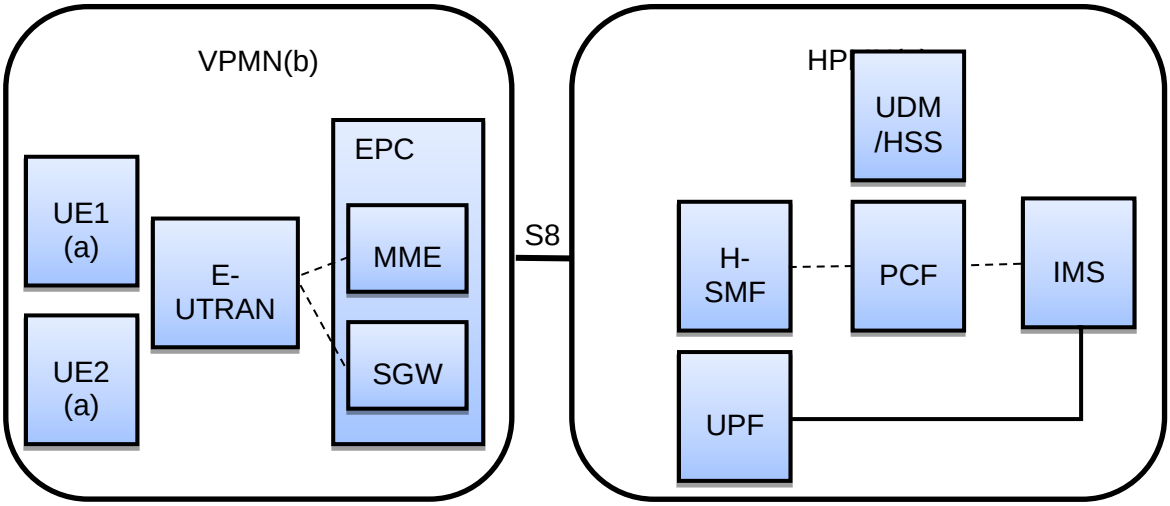

Figure 2.2.2-1: EPS Fallback

2.2.3 Emergency Call in 5GS/ EPS Fall back

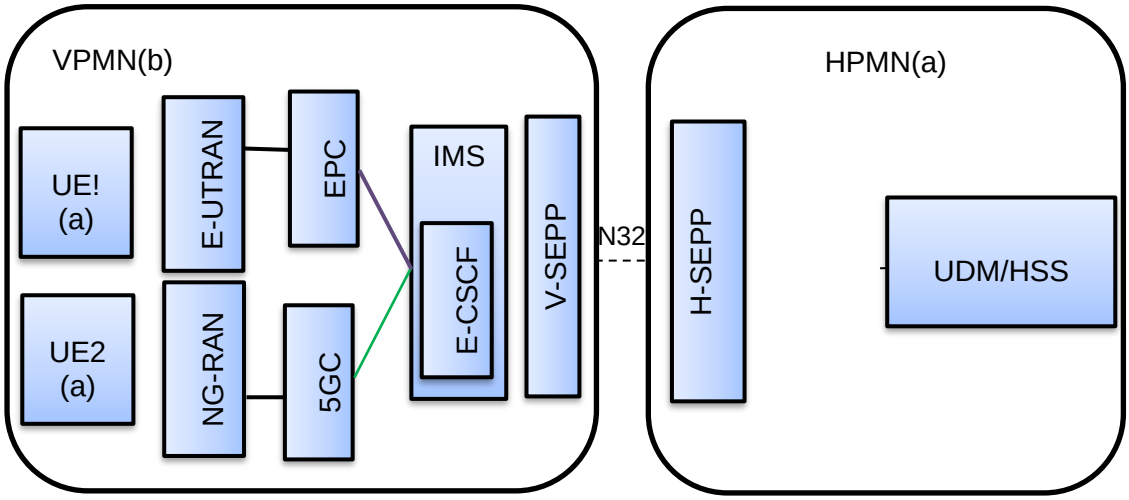

Figure 2.2.3-1: Emergency Call in 5GS/ EPS Fall back

2.2.4 SMS over NAS Configuration

The test configuration for SMS over NAS is specified below.

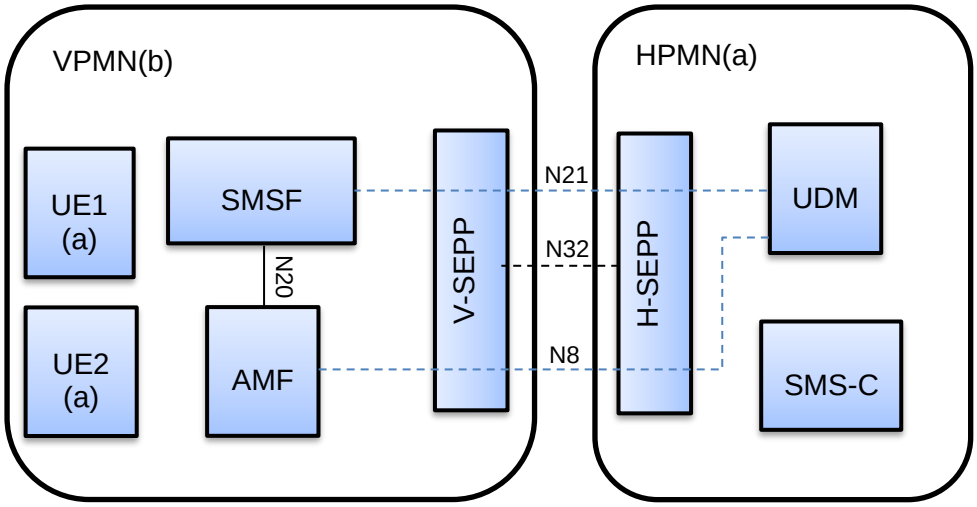

Figure 2.2.4-1: SMS over NAS Configuration

2.2.5 SMS over IP Configuration for Mobile Originated and MobileTerminated SMS

The test configuration for SMS over IP is specified below.

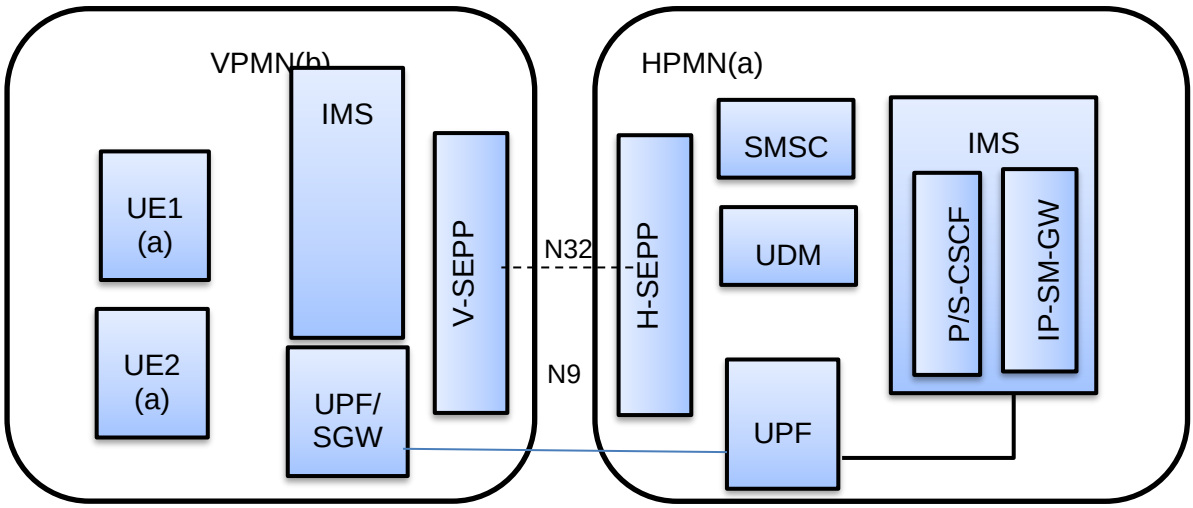

Figure 2.2.5-1: SMS over IP Configuration

2.3 Prerequisites for the Network Entities

For the VPMN and HPMN to enable IMS roaming using N9 Home Routed, the following conditions must be fulfilled in the 5GC and NG-RAN as specified in GSMA PRD NG.113 [3]. Conditions in IMS are not listed.

2.3.1 Prerequisite of the Visited Network Entities

The VPMN must support the following capabilities:

1. IMS well-known DNN;
2. QoS flow with 5QI=5 for SIP signalling;
3. QoS flow with 5QI=1 for voice media; in case of EPS Fallback, the request to establish the QoS flow with 5QI=1 is rejected by the gNB.
4. if videocall is supported, then QoS flow with 5QI=2 (or non-GBR 5QI);
5. Downlink service level gating (to avoid additional and unexpected traffic on the signalling bearer) as described in 3GPP TS 23.501 [1] and 3GPP TS 23.503 [53].
6. This is also needed to avoid that additional and unexpected traffic on the signalling bearer reaches the lawful interception functions for N9HR in the VPMN.
7. If data media for IMS Data Channel as specified in section 5.1 of 3GPP Release 16 TS 26.114 [51] is supported, then QoS flow e.g. with 5QI=9, 71, 72, 73, 74, 76 as determined by the IMS data channel service
8. Indication from AMF to the UE “IMS VoPS (Support Indicator) = supported” if the VPMN has a roaming agreement that covers support of IMS voice with the HPMN as specified in clause 5.16.3.2 of 3GPP TS 23.501 [1];

Note1: As specified in 3GPP TS 23.501 [1], "IMS VoPS" indicator can reflect the roaming agreement which is intended to support IMS voice only in EPS, while excluding the case of IMS voice via NR connected to 5GC.

9. Indication from AMF to the UDM "Homogeneous Support of IMS Voice over PS" based on the conditions specified in 3GPP TS 23.501[1].
10. Lawful interception of IMS voice calls and SMS as per 3GPP TS 33.127 [39], and data retention.

Note2: Lawful interception of IMS service is also needed in case of EPS Fallback.

11. To support IMS emergency calls for inbound roamers, the VPMN must support anonymous emergency calls over IMS as described in GSMA PRD NG.113 [3].

Note3: N9HR requires support for anonymous emergency calls over IMS.

Note4: As stated in section 5.16.4.1 of 3GPP TS 23.501 [1], IMS emergency services can also, as per policy of the VPMN and local regulation, be provided to:

12. inbound roamers without an IMS voice roaming agreement,
13. inbound roamers with a SUPI that cannot be authenticated, or
14. inbound roamers without a SUPI.

2.3.1.1 Prerequisite of the Home Network Entities

The HPMN must support the following capabilities:

1. IMS well-known DNN
2. QoS flow with 5QI=5 for SIP signalling;
3. QoS flow with 5QI=1 for voice media;
4. If videocall is supported, then QoS flow with 5QI=2 (or non-GBR 5QI);
5. If data media for IMS Data Channel as specified in section 5.1 of 3GPP Release 16 TS 26.114 [51] is supported, then QoS flow e.g. with 5QI=9, 71, 72, 73, 74, 76 as determined by the IMS data channel service

As ARP settings are exclusively related to the VPMN service prioritization strategy and may change from one VPMN to another, HPMN should agree with VPMN on a right Priority Level (PL) value to set on QoS flow with 5QI=5 in order to ensure that its sessions will be handled with the right priority. In addition, in order to enable N9HR IMS voice roaming, local regulatory requirements in the VPMN need to be fulfilled.

2.3.2 Additional prerequisite for Emergency Call testing

For the VPMN and HPMN to enable Emergency Calls for non UE detectable emergency numbers based on Emergency Number Lists, the VPMN must support the following capabilities:

1. Emergency Number Lists in AMF
2. Optional Extended Emergency Number Lists in AMF

For the VPMN and HPMN to enable Emergency Calls for non UE detectable emergency numbers based on SIP 380 Alternative Response, the HPMN must support the following capabilities:

1. VPMN specific emergency number lists in P-CSCF

2.3.3 Prerequisites for SMS over NAS Testing

SMS over NAS is a means to provide C-Plane based SMS over NR. SMS over NAS is defined in 3GPP TS 23.501 [1].

When SMS over NAS is provided for roaming, existing roaming interfaces will be used for SMS transport. The reference point N21 is used between the SMSF in the VPMN and the UDM in the HPMN. NG.113 [3]

2.3.4 Prerequisites for SMS over IP Testing

For SMS over IP testing, the following prerequisites are assumed:

1. The UE must possess the necessary capabilities for SMS in a 5G Standalone (SA) environment with fallback to IMS (4G) when roaming in VPMN (b).
2. Confirm the implementation of the IMS (IP Multimedia Subsystem) for SMS in the HPMN (a)

2.3.5 Prerequisites for Data Testing

For data testing, the following prerequisites are assumed:

- Smartphone (Cellular Data on, Cellular Data Roaming on, Wi-fi off, 5G SA on)
- Download app for testing data transfer
    - Ookla, nPerf or equivalent
- Valid Sim and roaming plan

2.4 User Equipment

The UE described in this section is necessary for undertaking the test cases described in this document. This applies to all groups specified in Section 2.1 of this document:

1. Two UEs supplied by VPMN (b).
2. Two 5G compatible USIMs supplied by HPMN (a).

   The supply of additional USIMs may be agreed by the HPMN (a) and VPMN (b), typically for the purposes of:

   a) Spare cards in case of failure
   b) Allocation from different UDMs

3. It shall be possible to specify what types of UEs are supplied for testing between operator agreement (HPMN (a) and VPMN (b)).

2.5 Test Equipment

The availability of a tester able to decode HTTP2 messages should be provided, but not strictly necessary for these tests. However it is essential for any analysis of test case failures. Clock capable of being used to allow testing personnel to record call start and chargeable start (answer) time of calls to an accuracy of better than five seconds should be required. If possible, the clock should be adjusted to be in alignment with the internal AMF clock which is used for the charging record function. Stopwatch, capable of measuring perceived chargeable duration of calls to an accuracy of one second, should also be prepared.

3 Test Cases

3.1 5G SA BASIC TEST CASES

3.1.1 5G SA only registration

3.1.1.1 Registration and Attach over N32

When testing the Registration and Attach procedures over the N32 interface for 5G SA only attach in a roaming context, it's essential to ensure that the roaming user equipment (UE) can successfully register and establish a session in the visited network according to the 3GPP standards, specifically TS 23.502 and TS 33.501, which cover the registration management and security aspects, respectively.

Objective:

To verify that the UE can perform SA registration and attach procedures in roaming scenario over the N32 interface.

Preconditions

1. UE contains USIM of HPMN(a).
2. Roaming agreements in place

Test Steps:

1. Power-up UE (a) and attempt to Attach on VPMN (b)'s 5G network.
2. UE sends a Registration Request to the visited network's AMF.
3. Verify SEPP from HPMN(b) can discover SEPP from VPMN(a)
4. Verify certificate exchange between SEPP from VPMN(b) and SEPP from HPMN(a)
5. Verify mutual authentication is performed during the handshake and that both SEPPs are authenticated before any data exchange.
6. Ensure TLS handshake is completed, and secure connection is established.
7. UE registers 5G SA successfully to VPMN(b)

Expected Results:

1. The visited network's AMF forwards the request to its SEPP(b)
2. Successful handshake initiation and response are observed between SEPP from HPMN(a) and SEPP from VPMN(b).
3. Successful certificate(s) exchange and authentication between SEPPs during TLS handshake.
4. Secure cipher suite is negotiated and chosen by SEPP from HPMN(a) and SEPP from VPMN(b).

5. Encryption keys are exchanged, and a secure channel is established between SEPP from HPMN(a) and SEPP from VPMN(b).
6. SEPP from VPMN(b) encapsulates and forwards the message over N32-f interface to the home network's SEPP from HPMN(a).
7. The home network's SEPP from VPMN(b) forwards the Registration Request to the home network's AMF/UDM for authentication.
8. Home network's AMF/UDM performs authentication and sends the response back to the visited network's SEPP from HPMN(a).
9. SEPP from HPMN(a) requests policy rules for the UE from the home network's PCRF.
10. The home network's PCRF sends the policy rules to the visited network's SEPP HPMN(a).
11. The visited network applies the received policy rules to the UE's session.
12. UE(a) successfully registers for 5G SA roaming on VPMN(b).

3.1.2 5G SA Data Service

- Using device settings “set 5G Standalone mode on”
- Place Device in “Field Test Mode”
- Check Field test screen to assure 5G connectivity
- Run data transfer app ref (**Error! Reference source not found.**)
- Record results

3.1.2.1 Expected result

- Tests completed successfully
- Metrics within tolerances defined by your company

3.1.3 5G SA DATA Cancel Location Test

3.1.3.1 Preconditions

Before conducting a 5G SA DATA Cancel Location test, the following preconditions need to be satisfied:

1. **5G Standalone Network:** A stable 5G Standalone (SA) network should be present where the test can be performed.
2. **Device Compatibility:** The device on which the test is conducted should be compatible with 5G SA networks.
3. **Testing Tools and Software:** Necessary network testing tools and software should be installed and properly configured.

3.1.3.2 Test Steps

1. **Initialize Connection:** Start by connecting the device to the 5G SA network. Verify the connection is stable and has adequate signal strength.

2. **Start Data Session:** Begin a data session on the device.
3. **Trigger Cancel Location:** Through the testing software, trigger a 'Cancel Location' command. This command is typically sent by the home network to the visited network, instructing it to cancel the registration of a particular subscriber.
4. **Observe Device Behavior:** Monitor how the device responds to the 'Cancel Location' command. The device should immediately stop the data session and start the re-registration process.
5. **Restart Data Session:** Once the device re-registers successfully, restart the data session and monitor the behavior.

3.1.3.3 Expected Results

1. **Successful Cancel Location:** The device should respond to the 'Cancel Location' command by immediately stopping the data session and starting the re-registration process.
2. **Successful Re-registration:** The device should be able to successfully re-register on the network after the 'Cancel Location' command.
3. **Data Session Restart:** After successful re-registration, the device should be able to restart the data session without any issues.

The aim of a 5G SA DATA Cancel Location test is to ensure that the device correctly responds to 'Cancel Location' commands from the network, which is critical for maintaining network integrity and security. Successful completion of this test indicates that the device is ready to handle such situations in a real-world scenario.

3.1.4 5G Operator Determined Barring

3.1.4.1 Preconditions

Before conducting a 5G SA DATA Operator Determined Barring test, the following preconditions need to be satisfied:

1. **5G Standalone Network:** A stable 5G Standalone (SA) network should be present where the test can be performed.
2. **Equipment Compatibility:** The device on which the test is conducted should be compatible with 5G SA networks.
3. **Testing Tools and Software:** Necessary network testing tools and software should be installed and properly configured.
4. **ODB Capability:** The network operator should have the ability to implement Operator Determined Barring.

3.1.4.2 Test Steps

1. **Initialize Connection:** Start by connecting the device to the 5G SA network. Verify the connection is stable and has adequate signal strength.
2. **Start Data Session:** Begin a data session on the device.
3. **Trigger Operator Determined Barring:** Through the testing software or network management system, trigger an Operator Determined Barring command. This command is sent by the network operator and should result in the barring of the device from the network.

4. **Observe Device Behavior:** Monitor how the device responds to the Operator
    i. The device should immediately stop the data session and be barred from the network.
    ii. Utilize traces to confirm signaling
5. **Lift Operator Determined Barring:** After a period of time, lift the Operator Determined Barring and observe if the device is able to re-establish the data session and reconnect to the network.

3.1.4.3 Expected Results

1. **Successful Operator Determined Barring:** The device should respond to the Operator Determined Barring command by immediately stopping the data session and being barred from the network
2. **Successful Reconnection:** Once the Operator Determined Barring is lifted, the device should be able to reconnect to the network and re-establish the data session without any issues.

The aim of a 5G SA DATA Operator Determined Barring test is to ensure that the device and the network correctly respond to Operator Determined Barring commands

3.2 VOICE CALL SERVICE TEST CASES

Note: Operators can choose between the VoNR or EPS fallback scenarios based on their technological capabilities and mutual agreements.

3.2.1 Voice Over NR- UE1 (a) Calls UE2 (a), Both Roamed in VPMN (b)

3.2.1.1 Precondition

1. VMPN (b) supports Voice Over NR
2. UE1 (a) and UE2 (a) have attached successfully and established a 5G PDN connection for IMS DNN in VPMN (b).
3. UE1 (a) and UE2 (a) have succeeded in IMS Registration to HPMN(a).

3.2.1.2 Actions

1. UE1 (a) establishes call to UE2 (a).
2. Call answered and held for one minute.
3. Quality assessed

3.2.1.3 Expected Result

1. Successful result if the call is established in 30 seconds, and the call is stable in the unanswered and answered phases, and there is no perceptible echo to both users, and call remains in intelligible/high quality conversation phase for one minute.
2. Check that the Voice Media Bearer is correctly created using 5QI=1 for mobile originating and terminating calls respectively.

3.2.1.4 Comments

This test case confirms Mobile Originated and Mobile Terminated call procedures for roamers.

3.2.2 EPS Fallback Mobile Originating and Terminating Voice Calls

Preconditions

1. VMPN (b) does not support VoNR
2. UE1 (a) and UE2 (a) is EPS Fallback capable.
3. UE1 (a) and UE2 (a) has attached successfully in 5G SA VPMN (b).
4. UE1 (a) and UE2 (a) have succeeded in IMS Registration to HPMN(a).

Action

1. UE1 (a) establishes call to UE2 (a).
2. Call is answered.

Expected Result

Test is successful if the following results are both achieved

Successful result if the call is established in 30 seconds, and the call is stable during the unanswered and answered phases, and there is no perceptible echo to both users, and call remains in intelligible/high quality conversation phase for one minute. See CCITT Rec P.84 Annex D for instructions on use of Quality Scales. This test will also confirm the correct delivery of Calling Line Identity (CLI) information (or lack thereof) or equivalent parameter in SIP message in a roaming scenario.

Comments

This test case confirms Mobile Originated and Mobile Terminated call procedures for roamers.

3.3 SMS TEST CASES

Note: Operators can choose between the SMSoNAS or SMSoIP scenarios based on their technological capabilities and mutual agreements.

3.3.1 SMS Over Non-Access Stratum (NAS) (Mobile Originated and Mobile Terminated)

3.3.1.1 Preconditions

SMS- Mobile Originated / Terminated (MO/MT) Services is provisioned in UDM subscription. UE1 (a) and UE2 (a) are registered in VPMN (b).

1. UE1 (a) and UE2 (a) are both SMS over NAS capable.
2. UE1 (a) and UE2 (a) are camping on 5G.
3. UE1 (a) and UE2 (a) successfully completed 5G Registration.

3.3.1.2 Action

1. Switch on UE1 (a). Switch off UE2 (a).
2. Use UE1 (a) to transmit a 160 character Short Message to UE2 (a) via the Home Country SMS - Service Centre with Message Waiting priority selected.
3. Switch on UE2 (a).
4. Await delivery of Short Message to UE2 (a) and check contents of Short Message with those transmitted.

3.3.1.3 Expected Result

Successful result if Short Message is correctly delivered within two (2) minutes of switching UE2 (a) on.

3.3.1.4 Comments

This test case confirms correct operation of SMS over NAS - Mobile Originated / Terminated for roamers.

3.3.2 SMS Over IP (Mobile Originated and Mobile Terminated)

3.3.2.1 Precondition

SMS- Mobile Originated / Terminated (MO/MT) Services is provisioned in UDM subscription. UE1 (a) and UE2 (a) are registered in VPMN (b).

1. UE1 (a) and UE2 (a) are both SMS over IP capable.
2. UE1 (a) and UE2 (a) are camping on 5G.
3. UE1 (a) and UE2 (a) successfully completed IMS Registration.

3.3.2.2 Actions

1. Switch on UE1 (a). Switch off UE2 (a).
2. Use UE1 (a) to transmit a 160 character Short Message to UE2 (a) via the Home Country SMS - Service Centre with Message Waiting priority selected.
3. Switch on UE2 (a).
4. Await delivery of Short Message to UE2 (a) and check contents of Short Message with those transmitted.

3.3.2.3 Expected Result

Successful result if Short Message is correctly delivered within two (2) minutes of switching UE2 (a) on.

3.3.2.4 Comments

This test case confirms correct operation of SMS - Mobile Originated / Terminated Services including "Message Waiting" and "Note UE Present" procedures.

3.4 EMERGENCY TEST CASES

These test cases cover both UE detectable, non-UE detectable emergency calls.

Note: Operators can choose between the Emergency call over NR or EPS fallback scenarios based on their technological capabilities and mutual agreements.

3.4.1 UE Detectable Emergency call over NR

3.4.1.1 Preconditions

UE1 (a) contains USIM of HPMN (a).

A barring of all outgoing calls is activated on the UE1 (a) for testing UE detectable Emergency Calls.

3.4.1.2 Actions

Power-up UE1 (a) and perform an emergency call to:

112 or 911

A national emergency number of the local country, which is either the one of emergency numbers stored on the USIM and/or UE itself, or provided by the VPMN AMF to the UE via the Emergency Number List and Extended Emergency Number List during the attach and Tracking Area Update procedures.

3.4.1.3 Expected Result

Successful result if calls are established with PSAP of the visited country or equivalent simulated PSAP.

3.4.1.4 Comments

This test checks the possibility to make an Emergency Calls both in the case of UE Detectable Emergency Calls.

The domain selection of an emergency session is referred to 3GPP TS 23.167, annex H [11].

The following Emergency Call options are possible, depending on the capabilities of UE, HPMN and VPMN (see also GSMA PRD NG.119 [12]):

- EPSFB Emergency Call (roaming / non-roaming)
- IMS Emergency Call with Emergency Registration (non-roaming case).
- IMS Emergency Call without Emergency Registration, i.e. anonymous IMS
- emergency call (requiring E-CSCF in VPMN) (roaming case).

For the IMS Emergency Call, the UE can convey its location, using the "Geolocation" header field and the PIDF location object in the initial SIP INVITE request as described in GSMA PRD IR.92 [4] section 5.2.3.

For the roaming case, the appropriate option needs to be specified in bilateral agreement between HPMN (a) and VPMN (b).

3.4.2 Non-UE Detectable Emergency call over NR

3.4.2.1 Preconditions

As 3.4.1.1 plus,

- Deactivate barring of all outgoing calls on UE1 (a) when testing non UE detectable Emergency Calls.

3.4.2.2 Actions

Power-up UE1 (a) and initiates a call to:

- A national emergency number of the local country which is not detected by the UE to be a local emergency code.

Optionally perform a call to a short code of emergency service of HPMN.

3.4.2.3 Expected Result

The call attempt is recognised by the H-IMS to be a local emergency code and rejected with a response code, e.g. to utilize the SIP 380 Alternative Service informing the UE that call should be re-attempted as an emergency call. On receipt of the response code, the UE behaves as in section 3.4.1 and completes the call.

In the roaming scenario, the HPMN IMS is assumed to be aware of local emergency codes in the VPMN as part of the roaming agreement.

A short code service in the HPMN would be terminated successfully in the HPMN.

3.4.2.4 Comments

This test checks the possibility to make the Emergency Calls in the case of non UE detectable Emergency Calls. The handling of non UE detectable PS Emergency Calls is defined in GSMA PRD NG.119 [12] section 3.4.3.

3.4.3 UE Detectable Emergency call EPS Fallback

3.4.3.1 Preconditions

UE1 (a) contains USIM of HPMN (a).

A barring of all outgoing calls is activated on the UE1 (a) for testing UE detectable Emergency Calls.

3.4.3.2 Actions

Power-up UE1 (a) and perform an emergency call to:

112 or 911

A national emergency number of the local country, which is either the one of emergency numbers stored on the USIM and/or UE itself, or provided by the VPMN MME to the UE via

the Emergency Number List and Extended Emergency Number List during the attach and Tracking Area Update procedures.

3.4.3.3 Expected Result

Successful result if calls are established with PSAP of the visited country or equivalent simulated PSAP.

3.4.3.4 Comments

This test checks the possibility to make an Emergency Calls both in the case of UE Detectable Emergency Calls.

The domain selection of an emergency session is referred to 3GPP TS 23.167, annex H [11].

The following Emergency Call options are possible, depending on the capabilities of UE, HPMN and VPMN (see also GSMA PRD NG.119 [12]):

- EPSFB Emergency Call (roaming / non-roaming)
- IMS Emergency Call with Emergency Registration (non-roaming case).
- IMS Emergency Call without Emergency Registration, i.e. anonymous IMS
- emergency call (requiring E-CSCF in VPMN) (roaming case).

For the IMS Emergency Call, the UE can convey its location, using the "Geolocation" header field and the PIDF location object in the initial SIP INVITE request as described in GSMA PRD IR.92 [4] section 5.2.3.

For the roaming case, the appropriate option needs to be specified in bilateral agreement between HPMN (a) and VPMN (b).

3.4.4 Non-UE Detectable Emergency call EPS Fallback

3.4.4.1 Preconditions

As 3.4.1.1 plus,

- Deactivate barring of all outgoing calls on UE1 (a) when testing non UE detectable Emergency Calls.

3.4.4.2 Actions

Power-up UE1 (a) and initiates a call to:

- A national emergency number of the local country which is not detected by the UE to be a local emergency code.

Optionally perform a call to a short code of emergency service of HPMN.

3.4.4.3 Expected Result

The call attempt is recognised by the H-IMS to be a local emergency code and rejected with a response code, e.g. to utilize the SIP 380 Alternative Service informing the UE that call

should be re-attempted as an emergency call. On receipt of the response code, the UE behaves as in section 3.4.3 and completes the call.

In the roaming scenario, the HPMN IMS is assumed to be aware of local emergency codes in the VPMN as part of the roaming agreement.

A short code service in the HPMN would be terminated successfully in the HPMN.

3.4.4.4 Comments

This test checks the possibility to make the Emergency Calls in the case of non UE detectable Emergency Calls. The handling of non UE detectable PS Emergency Calls is defined in GSMA PRD NG.119 [12] section 3.4.3.

.

4 Pre-Testing Data Exchange

4.1 General

It is necessary for the two PMNs to have exchanged the pre-testing data defined in the following sections prior to the commencement of testing.

4.2 Testing Contact Information

The following test co-ordination contact information should be exchanged by both PMNs:

1. Names
2. Telephone numbers
3. Email address

4.3 PMN/IP-addressing, numbering and routing data

4.3.1 5G-only testing

For 5G-only testing is performed, the following information should be exchanged between both PMNs:

1. AMF IP addresses used
2. SMF IP addresses used
3. UPF IP addresses used
4. SEPP IP addresses and FQDNs used
5. UDM IP addresses used
6. PDN subscription context
7. DNNs
8. DNS IP-Addresses
9. HTTP/FTP page and 20MB file name
10. SMS Service Centre IP address

4.3.2 EPS Fallback

If EPS Fallback / SMS over SGs testing is performed, the confirmation of the PMN addressing numbering and routing data as referenced in PRD IR.88 [7] is regarded as advisable. Such information includes:

1. MME Address
2. SGW Address
3. PGW Address
4. HSS addresses
5. DEA IP addresses and FQDNs used
6. DNS IP-Addresses
7. APNs
8. SMS Service Centre IP address

5 Test Cases Excel Sheet

Annex A Document Management

A.1 Document History

Version	Date	Brief Description of Change	Approval Authority	Editor / Company
0.1		Initial drafts for discussion	Networks Group TG	Sanaz Moshirian, CKHH
1.0		First Approved Version	Networks Group TG	Sanaz Moshirian, CKHH

Other Information

Type	Description
Document Owner	Network Roaming Group (NRG)
Editor / Company	Sanaz Moshirian, CKHH

It is our intention to provide a quality product for your use. If you find any errors or omissions, please contact us with your comments. You may notify us at prd@gsma.com

Your comments or suggestions & questions are always welcome.